ALLEGION™

VON DUPRIN®

Click next for quick tips on how to navigate Allegion Price Books quicker!

Effective May 4, 2019 • Rev 5/19

This price list supersedes and cancels all previous price lists. Prices shown are subject to change without notice.

Administrative Offices

Allegion Administrative Office
11819 N. Pennsylvania St.
Carmel, IN 46032
us.allegion.com

Placing orders

You can place orders with Allegion via the fax number or email listed below:

Email: Order_VonDuprin@allegion.com
Fax#: 1-800-999-0328

Engineering Special Product Quotes

Email: VDI_Specials@allegion.com
Fax #: 1-877-730-6248

Customer Care

Our Customer Care Representatives are available for questions or assistance.
You can reach them at **877-671-7011** (Press/Say 1 for Sales Support | Press/Say 2 for Product Support | Press/Say 3 for RSO) or through the email addresses listed below:

Sales Support

support@allegion.com

Technical Product Support

Exit Devices
Exits_TechProdSupport@allegion.com

Request for Quote

Carolinas
(North Carolina, South Carolina, Virginia)
Carolinas.Quotes@allegion.com

Central
(Arkansas, Illinois, Iowa, Kansas, Missouri, Nebraska, Oklahoma)
Central.Quotes@allegion.com

Chicago
(Illinois-Northern, Wisconsin)
Chicago.Quotes@allegion.com

Florida
Florida.Quotes@allegion.com

Great Lakes
(New York, Pennsylvania)
GreatLakes.Quotes@allegion.com

Metro New York
Metro.Quotes@allegion.com

Michigan
Michigan.Quotes@allegion.com

Mid Atlantic North
(New York, Pennsylvania)
Mid.Atlantics.north.quotes@allegion.com

Mid Atlantic South
(Delware, Maryland, New Jersey)
Mid.Atlantics.south.quotes@allegion.com

Midwest
(Indiana, Kentucky, Ohio, West Virginia)
Midwest.Quotes@allegion.com

Mountain States
(Colorado, Idaho, Montana, Nevada, Utah, Wyoming)
Mtn.States.Quotes@allegion.com

New England
(Connecticut, Main, Massachusetts, New Hampshire, Rhode Island, Vermont)
NewEngland.Quotes@allegion.com

North Central
(Minnesota, North Dakota, South Dakota)
NorthCentral.Quotes@allegion.com

Northern California
NoCal.Quotes@allegion.com

Northwest
(Alaska, Oregon, Washington)
Northwest.Quotes@allegion.com

South
(Alabama, Georgia, Louisiana, Mississippi, Tennessee)
South.Quotes@allegion.com

Southern California
(California-Southern, Hawaii)
SoCal.Quotes@allegion.com

Southwest
(Arizona, New Mexico)
Southwest.Quotes@allegion.com

Texas
Texas.Quotes@allegion.com

Index

Sales Policy 3
General Terms and Conditions of Sale and Service 4-7
Finishes 8
Standard Lever Suites 9
M Collection Levers 10
General Information 11
How to Order 12-13
Special Products 14-18

Exit Devices
22 Series 20-24
33A/35A Series 25-38
55 Series 39-45
88 Series 46-52
98/99 Series 53-70
XP98/XP99 Series 71-76
XP98/XP99 Series 77
Pool Exit Hardware 78
94/95 INPACT Series 79-84
2670 Guard-X Series 85-86

Exit Device Options
-2 - Double Cylinder 66, 75
-2SI - Double Cylinder with Secuirty Indicator 66, 75
AM - Anti-Microbial Finish 38, 68
AX - Accessible Device 24, 38, 66, 75, 83
CD - Cylinder Dogging 35, 66, 75
CDSI - Cylinder Dogging w/Indicator 35, 66, 75
CI - Cylinder Dogging Indicator 66, 75
CON - Connectors 24, 38, 70, 73, 108
Crossbar Options 52
CS - Cable System 37, 68
CX - Chexit 37, 70, 77
DI - Dogging Indicator 66, 75
E - Electric Unlocking 38, 52, 70
EL - Electric Latch Retraction 36, 69, 76
Flush Transom 52
HDSI - Hex Dogging w/ Indicator 35, 66, 75
HH - Hurricane 35, 66
INS - Insculclad or Applied Panel 36, 67
LBR - Less Bottom Rod 24, 38, 67, 79
LD - Less Dogging 24, 35, 66, 75
LX - Latchbolt Monitoring 24, 26, 36, 69, 76, 83
PL - Pullman Latches 37, 52, 67
PN - Pneumatic 35, 69
QEL - Quiet Electric Latch Retraction 36, 69, 76, 83
RX - Request to Exit 24, 36, 52, 69, 76
SD - Special Center Case Dogging 69, 75, 76, 66
SG - Safety Glow 35, 67
SS - Signal Switch 36, 69, 83, 88
Touchbar Options 67
WH - Weep Holes 35, 68
WS - Windstorm 66

Exit Locks - Latching Hardware
GUARD-X 84-85

Accessories
Dummy Cross Bars 88-88
Strikes 89
Trims 90-94
Control Trims 95-96
Cylinder Controls 97
Cover Plates 98
Cylinders 98
Glass Bead Kits 98
Mullions 99-100
Rod and Latch Guards 100
Mortise Locks 100
237 Two Point Latch 101
Extension Rod Kits 102
One Piece Top Rod Kits 102
Security Screw Packages 103
Sex Bolts 104

Electrical Products
Alarm Kits/Mortise Locks 106
Switches/Delayed Exit System/Interface Boxes/Relays 107
Allegion Connect/Electric Power Transfers 108
Power Supplies 109
Electric Strikes 110-112
Monitor Strikes/Schlage Electronic Trim 112

Parts
Numerical Index 114-117
22 Series 118-119
33A/35A Series 120-125
33/3550AWDC Series 126
330/350 Series 127
55 Series 128-130
88 Series 131-136
98/99 Series 137-142
98/9949 Series 143
98/9950WDC Series 144
XP98/99 Series 145
94/95 INPACT Series 146
7500 Series Mortise Lock 147
Controls 148-150
Trims 151-156
Mullions 157
Screw Packs/ Shims/ Miscellaneous 158
Maintenance Kit and Replacement Packages 159
Electric Strikes 160-164
Electric Parts 164-166
GUARD-X 167
Service Replacement Items 168
Part Number Cross Reference 169-170
Wiring Diagrams 171

Sales Policy

General: The Company will comply with applicable laws and regulations in effect on the date of the Company's proposal as they may apply to the manufacture of the Equipment. Compliance with any local governmental laws or regulations relating to the location, use or operation of the Equipment, or its use in conjunction with other equipment, shall be the sole responsibility of the Purchaser.

Title and Risk of Loss: Title and risk of loss or damage to the Equipment shall pass to the Purchaser upon tender of delivery F.O.B. manufacturing facility unless otherwise agreed upon by the parties, except that a security interest in the Equipment shall remain in the Company, regardless of mode of attachment to realty or other property, until full payment has been made therefor. Purchaser agrees upon request to do all things and acts necessary to perfect and maintain said security interest and shall protect Company's interest by adequately insuring the Equipment against loss or damage from any cause wherein the Company shall be named as an additional insured.

Minimum Charge: Minimum invoice is $50.00 net product value, excluding freight charges.

Non-Standard and Special Items: Contact factory for availability and price of non-standard finishes and special items not listed in this price book. Additional charges may be accrued for product modification or engineering services.

Additional charges may be necessary for furnished material for doors, frames, and rabbeted frames, other than standard. Submit door and frame detail if quotation is desired 1-3/4" and 2-1/4" are considered standard.

Purchase Authorization: Prior credit approval will be required from all purchasers. Possession of this price book does not imply the right to purchase from Von Duprin, Inc. Authorized Von Duprin, Inc. distributors will be required to maintain a minimum of $25,000.00 in net purchases per year to be maintained as a direct factory account.

Patents: The Company shall defend any suit or proceeding brought against the Purchaser and shall pay any adverse judgment entered therein so far as such suit or proceeding is based upon a claim that the use of the Equipment manufactured by the Company, and furnished under this contract constitutes infringement of any patent of the United States of America, providing the Company is promptly notified in writing and given authority, information and assistance for defense of same; and the Company shall, at its option, procure for the Purchaser the right to continue to use said Equipment, or to modify it so that it becomes non-infringing, or to replace the same with non-infringing equipment, or to remove said Equipment and to refund the purchase price. The foregoing shall not be construed to include any agreement by the Company to accept any liability whatsoever in respect to patents for inventions including more than the Equipment furnished hereunder, or in respect of patents for methods and processes to be carried out with the aid of said Equipment. The foregoing states the entire liability of the Company with regard to patent infringement.

Terms and Conditions

Allegion General Terms and Conditions of Sale and Service

1. GENERAL/ACCEPTANCE. (a) This Agreement contains the only terms and conditions by which Company will quote and sell Deliverables to Customer; (b) The terms "purchase order" or "order" for the purposes of this Agreement include the term "request for quotation," as appropriate; (c) This Agreement supersedes all pre-printed or boilerplate terms and conditions set forth in any purchase order issued by Customer; (d) No reference herein to Customer's purchase order will in any way incorporate different or additional terms and conditions, all of which Company hereby expressly objects to; (e) **ANY ACCEPTANCE BY COMPANY OF CUSTOMER'S PURCHASE ORDER IS EXPRESSLY CONDITIONED ON THE CUSTOMER'S ASSENT TO AND ACCEPTANCE OF THE TERMS AND CONDITIONS CONTAINED IN THIS AGREEMENT;** (f) Company reserves the right to decline any order, in whole or in part, for any reason.

2. ORDERS.

a. Order Processing. When Customer wishes to place an order for Deliverables, it will deliver to Company a purchase order. All such purchase orders must (i) be in a written format acceptable to Company, (ii) be legible, (iii) include a purchase order number, (iv) include Customer's account number, invoice address, ship to address, shipping method, shipper's letter of instruction for international shipments, part number, pricing, and designated contact information, (v) include, if applicable, any special configuration ID numbers, necessary programming information, special factory instructions, and requested specifications regarding a particular finish, handing, design, backset, or strike, (vi) reference any applicable pricing discounts under an ongoing buying program or based on a written quote from Company, along with the applicable buying program number or quotation number, and (vii) not combine buying program and quoted product on the same order.

b. Minimum Orders. In the event the order value does not meet any required minimum net Deliverable value, Company may, at its sole discretion, (i) increase the quantity of items in the order to meet the minimum net Deliverable value requirement; (ii) apply a minimum order charge; (iii) reject the order, or (iv) waive the requirement, provided that the waiver of a requirement for one order shall not constitute a waiver of the requirement for any future orders.

c. Acceptance of Purchase Orders. Company will endeavor to (i) acknowledge receipt of each purchase order issued in accordance with this Agreement, and (ii) notify Customer whether Company accepts or rejects the purchase order. If Company fails to accept or reject a purchase order within a reasonable time period, such failure to respond will be deemed a rejection of the entire order. Orders that combine buying program and quoted product on the same order will be routed back to your local RSO office in order to review subject purchase order.

d. Changes to Order/ Cancellation of Orders. Additional terms and conditions regarding order changes and cancellations are available on the Allegion customer website, **WHICH TERMS ARE EXPRESSLY INCORPORATED HEREIN BY REFERENCE.** Unless otherwise provided herein, Customer acknowledges that (i) requesting a Change Order may cause a delay in the scheduled shipment date, a longer lead time or result in a new scheduled shipment date; (ii) Orders may not be changed after 48 hours of Company's order acknowledgment; (iii) After 48 hours of Company's order acknowledgment, all changes to an accepted purchase order will be subject to a Change Order charge of 25% of the net Deliverable value, plus the cost of labor and fabrication or raw material that Company incurred prior to the receipt of the Change Order from Customer, or that may be required due to the Change Order; (iv) the requested change may result in additional charges for labor, fabrication, and raw material, and (v) if Customer cancels an order or portion of an order that includes Deliverables that have been manufactured and prepped for shipping, a 45% restocking fee will apply. Notwithstanding the foregoing, Customer cannot change or cancel credential orders, reader orders, biometrics orders or any non-cataloged, special, Custom or nonstandard items once they have been placed. All cancelled orders for a Non Recurring Expense (NRE), credential orders, reader orders, biometrics orders, and/or Custom orders will be subject to a cancellation charge of 100% of the acknowledged price.

e. Add-ons. Add-on orders will not be accepted. Additions to orders will be entered as separate stand-alone orders and must qualify for all terms of sale, including discounts, on an individual basis.

f. Fast-Track Orders. No changes or cancellations will be accepted on the 24-Hour Fast Track Program. For 3-day Fast Track orders, changes and cancellations may only be requested by Customer within 24 hours of Company's order acknowledgment if the order has not shipped. For 5-Day Fast Track orders, changes and cancellations may only be requested by Customer if the order has not shipped and if the request is made to Company within 48 hours of Company's order acknowledgment. Return Material Authorization (RMA) for Deliverables must be processed through Fast Track Customer Service.

g. Steelcraft Orders. For all Steelcraft orders, changes or cancellations are allowed without penalty only if made within 48 hours of Company's order acknowledgment, and provided that the order has not shipped. Some exceptions do apply – please consult the factory. Changes are not allowed on Rapid Program orders after the order has been entered and acknowledged. After 48 hours of Company's order acknowledgment, all changes or cancellations are subject to a charge of 25% of the order. Unless otherwise specified by Company in writing, any changes to orders acknowledged by Company that affect the delivery date will be deemed a new order and will require acknowledgement by Company as provided in this Section. Additional products, features, terms and conditions regarding the Rapid Program are available on the Allegion customer website, **WHICH TERMS ARE EXPRESSLY INCORPORATED HEREIN BY REFERENCE.**

3. PRICES, INVOICES AND PAYMENT.

a. Prices. The prices in Company's Price Book are subject to change at any time, without notice to Customer. Company may charge Customer additional amounts if Customer requests special packing, marking, shipment, product modification, or engineering services. Oral prices specified by Company are null and void. Quote numbers must be referenced on Customer's purchase order in order for the Company's quoted pricing to apply. Orders that do not reference a quote number will receive buy program pricing or book net pricing. Quoted prices are for those specific products quoted for a specified job, and are subject to the Price Book in effect at the time Company receives the order.

b. Taxes. Prices do not include any present or future federal, state or local property, license, privilege, sales, use, excise, gross receipts or other like taxes or assessments which may result from transactions or any services performed in connection therewith. Any taxes, charges, or duties imposed by any governmental authority on the sale of Deliverables will be paid by Customer, in addition to the selling price specified by Company. Credits for U.S. sales tax applied to invoices will only be granted if valid exemption documentation is provided within 30-days of the invoice date and a case is initiated by customer service. Exemption documentation may be emailed to sales.tax.certificates@allegion.com, this e-mail address cannot be used to request a credit for sales tax charged all such requests must be made with customer service. All certificates sent to the e-mail address must include the following information: (1) Customer account number(s); (2) Customer name; and (3) Allegion brand(s) the certificate should be applied to.

c. Payment Terms. Company will deliver to Customer an invoice with each shipment of Deliverables hereunder. Customer will pay all invoiced amounts within 35 days of the invoice date (subject to any early pay discounts that may be offered to Customer by Company in its sole discretion). Customer will make all payments in United States dollars. Past due invoices will be subject to a late payment service charge of 1.5% per month on any overdue unpaid balance, equivalent to 18% per annum, or the maximum rate permitted by law, whichever is less. Customer shall reimburse Company for all costs of collection, including, without limitation, reasonable attorneys' fees, for any overdue amount owed by Customer to Company, and such collection costs shall also be subject to interest charges.

4. QUOTATIONS.

a. Project Quotations. Project or new construction quotes are restricted to the specific project quoted for the quantities, finishes, and series of Deliverables referenced on the quote. Company reserves the right to require proof of sale of Company products for any quoted project.

b. Stock Quotations. Deliverables fulfilling stock quotations may only be used for the following: i) Stocking of the Customer's shelves for small, quick-turn, discretionary projects, or ii) Sale to a general contractor or installer for new construction. Stock quotations may not be used for any project containing any Company no-substitution, specified products. Deliverables purchased under Stock Quotations cannot be redistributed to other Customer branch locations or re-sold to other resellers or used for aftermarket sales, end-user annual contracts or sold over the counter to any walk in trade.

c. General. All quotes are subject to this Agreement, unless otherwise specified by Company, and are subject to change at any time prior to Company's acceptance of a purchase order referencing the applicable quote number. Company, its representatives and employees reserve the right, in their sole discretion and for any reason, to refuse a Customer's request to quote a price other than the standard list price, regardless of whether Company or its representatives or employees have previously quoted discounted prices to the Customer on some or all of its orders. Customer's failure to comply with this Section 4 will be considered a material breach of this Agreement, and will entitle Company to immediately terminate any purchase orders and/or Customer's ability to distribute Company's products.

5. SECURITY INTEREST. Customer grants Company, and Company retains, a purchase money security interest and lien on any and all of Customer's rights, title and interest in each Deliverable sold by Company to Customer, wherever located, until the invoice for the applicable Deliverable(s) is paid in full, including any late charges and costs of collection. Customer authorizes Company to, and will assist Company in, taking all necessary steps to perfect and maintain Company's interest in such Deliverables.

6. CREDIT TERMS. . Unless Customer pre-pays all of its purchase orders in advance, its purchase orders will be subject to the credit limit and other terms of credit ("Credit Terms") set forth in Company's credit application, which Credit Terms Customer acknowledges are subject to change by Company at any time. Company reserves the right to request payment in advance of shipment or any order or to request adequate assurances for Customer's payment of an order and may withhold or stop shipment, without any liability to Company, until Customer submits payment or adequate assurance of payment.

7. RESALE OF DELIVERABLES. Customer agrees and warrants that it will offer Company products in support of Company-written specifications and will maintain sufficient inventory to adequately support End Users, installers, and/or general contractors' needs. Company may implement an MSRP or a resale pricing programs at any time in its sole discretion. Failure to comply with such program(s) will be considered a material breach of this Agreement, and will entitle Company to immediately terminate any purchase order and/or Customer's ability to distribute Company's products. Customer shall, at its own expense, gain and maintain sufficient knowledge of the industry and products competitive with Deliverables so as to be able to (a) explain in detail to End Users, installers, and/or general contractors the differences between the Deliverables and competing products, (b) ensure that an adequate number of trained, capable and qualified technical personnel with sufficient knowledge of the Deliverables and who have obtained all necessary licenses and permits are available to assist End Users, installers, and/or general contractors, and (c) respond to such End Users, installers, and/or general contractors with respect to the general operation and use of the Deliverables including, but not limited to, (1) acting as a liaison between the End Users, installers and/or general contractors and Company in matters requiring Company participation, (2) providing general product information and configuration support on standard protocols and features, (3) collecting relevant technical problem identification information, and (4) posting and distributing any warranty information concerning the Products in accordance with Company's instructions. Customer is responsible for all service and support resulting from the re-sale of any Deliverable to End-Users, installers and/or general contractors, examples of which may include, but are not limited to, support activities such as installation, initialization, software set-up, training, trouble-shooting, technical support and field service. In the event Customer is unwilling or unable to perform said support activities, Company reserves the right to recover from Customer any and all expenses incurred by Company to resolve the afore-mentioned End-User, installer and/or general contractor issues. Technical product training is recommended for Customer in order to fully service and support Deliverables purchased from Company that are resold to End-Users, installers and/or general contractors.

8. DEFAULT. If Customer is in default of payment or otherwise with respect to any purchase order or other contract with Company, Company shall have the right, in addition to all other legal remedies and without prejudice to any of its right hereunder, to defer further shipments under that or any other purchase order until such default is corrected and to declare all outstanding bills of Customer to be immediately due and payable.

9. INSPECTION AND DELIVERY.

a. Inspection. Customer will inspect all Deliverables immediately after receiving them. Customer will be deemed to have accepted the Deliverables unless Customer notifies Company in writing of any nonconformance within 10 days of delivery and provides Company written evidence reasonably documenting that nonconformance. Inspection of Deliverables at Company's facility is not permitted.

b. Delivery. Delivery schedules for Deliverables are based upon current production capacities, material or component availability, and inventory, and may be changed by Company as conditions require. Delivery schedules for services are based upon Company's prompt receipt of, and prompt access to, Customer's equipment and all information necessary to complete the services. In no event will any delivery date be construed as falling within the meaning of "time is of the essence." Partial delivery shall be accepted by Customer and paid for at the price and on the terms stated herein. Any partial delivery shall constitute a separate sale, and payment shall be separately made when due. If any part of a delivery hereunder is not delivered by Company in accordance with Customer's purchase order, this Agreement shall not be affected thereby.

10. TITLE & RISK OF LOSS. Unless otherwise specified by Company, (i) where the Customer is located in the United States, all Deliverables will be sold "Uniform Commercial Code, FOB Origin, Company's factory"; and (ii) where the Customer is located outside of the United States, all Products will be sold "Ex-works, Company's factory (Incoterms 2010)." In either instance, title and risk of loss will pass to Customer upon delivery to the carrier at Company's factory, provided, however, as set forth herein, Company shall retain a security interest in the Deliverables until full payment has been made therefore, and Customer agrees, upon request, to do all things and acts necessary to protect Company's interest by adequately insuring the Deliverables against loss or damage from any cause and to have Company named as an additional insured. Customer will promptly provide Company with a copy of the relevant certificate of insurance upon Company's request.

11. SHIPPING.

a. Freight Charges. Company will ship all Deliverables in accordance with Company's freight shipment guidelines, which are set forth on the My Allegion Portal ("Freight Shipping Guidelines"), **WHICH TERMS ARE EXPRESSLY INCORPORATED HEREIN.**

b. Rush Charges. Expedited order options are available as set forth in Company's Freight Shipping Guidelines.

c. Packing and Marking. Company will pack, mark, and ship Deliverables according to its standard procedures for shipment, unless the parties agree, in writing, that Company will comply with any special instructions provided by Customer. Special instructions may result in an increased price.

d. International Shipments. For all international orders, a Shipper's letter of instruction must be submitted in writing with the order. Failure to do so will result in the order being rejected. Complete adherence to this order requirement will be strictly enforced. Company will not be held liable for any charges resulting from delays due to lack of complete required information being supplied.

e. Once received by the Company, a purchase order cannot be combined with any other order to increase average order size as it relates to Company's Freight Shipping Guidelines. However, for orders placed under Company's FastTrack 24 Hour/5 Day Program (available for Schlage, Von Duprin, LCN and Glynn-Johnson products); ii) FastTrack 24 Hour/3 Day Program (available for Ives products); or ProExpress (available for specific product lines stated in the ProExpress price book for Falcon, Ives, Glynn Johnson, LCN, Schlage and Von Duprin products), the applicable brands or product categories may, subject to certain order requirements identified by Company, be combined on a single order to increase average order size used in Company's Freight Shipping Guidelines.

12. CLAIMS. All claims must be submitted in writing to Company as follows: (i) All claims for prices must be submitted within thirty (30) days from the date of invoice; (ii) All claims regarding Deliverable quantity or incorrect orders must be submitted within ten (10) days from the date of delivery; (iii) All claims for damage to Deliverables (while in the care, custody, and control of Company) must be submitted within thirty (30) days from the date of invoice; (iv) All claims for loss or damage to Deliverables while in the care, custody, and/or control of a carrier will be the responsibility of Customer, unless otherwise agreed by the parties.

13. PRODUCT CHANGES. Company's product policy is one of ongoing update and revision, and accordingly, Company reserves the right to change, without notice, the design of, or the process of manufacturing, the Deliverables covered by this Agreement.

14. PRODUCT USAGE LIMITATION. Customer agrees: (i) not to sell or use a Deliverable in any manner contrary to the manner in which the Deliverable is intended to be used; and/or (ii) not to modify the design of any Deliverable for use with another product without the prior written consent of Company.

15. PRODUCT RETURNS. Unless otherwise agreed by the parties in writing, Deliverables that are correctly furnished by Company per the purchase order may not be returned unless Customer receives written authorization from Company. If returns are authorized by Company, a return merchandise authorization ("RMA") number must be provided by Company. Deliverables identified under such RMA must be returned to Company within 90 days of issuance of the RMA. Such RMA number and any accompanying RMA documents, the original invoice number, and a written explanation for the return must be included with the returned Deliverables in order for Company to inspect and approve a credit for the return. **For warranty returns**, a credit in the amount of the original purchase price will only be issued if, after Company's receipt and inspection of the returned Deliverables, Company confirms, in its sole discretion, the defect is valid and approves the return. **For non-warranty returns/convenience returns**, in the event Company approves such a return, in its sole discretion, the following shall apply: (a) the total amount of Deliverables requested to be returned shall be a minimum of $250.00; (b) a credit will be made to Customer's account in the amount of the original purchase price less freight and a handling charge of 45% of the net material on the original invoice; and (c) only Deliverables that are new, current, standard, non-obsolete, non-specially manufactured, unused, in their original condition as at the time of sale by Company to Customer, in their original packaging and in Customer's inventory less than 180 days from the date of shipment by the Company, and not ordered as part of a master key solution may be considered by Company for return. Such credit will only be issued if, after Company's receipt and inspection of Deliverables, Company approves the return. The amount of final credit will be determined upon receipt at the factory and following Company's inspection and analysis of the condition of the returned material. Company retains the right to deny credit to anyone for any reason.

16. CONFIDENTIAL INFORMATION.

a. Non-Use And Non-Disclosure. Customer shall not use the Confidential Information of the Company except for the purpose of performing its obligations under this Agreement or exercising the rights granted herein (the "Purpose"). Customer shall protect Confidential Information of the Company from disclosure and unauthorized use in the same manner that it protects its own Confidential Information, but in no event shall such standard of care be less than reasonable care. Customer may disclose Confidential Information of the Company only to its employees who require such information for the Purpose and who are subject to confidentiality obligations at least as protective as those set forth herein.

b. Proprietary Information and Advice. (a) All designs, data, and specifications provided by Company are proprietary and may not be disclosed or reused by Customer without the prior written consent of Company; (b) Company assumes no obligation or liability for any advice given by Company, the results obtained, or damages incurred as a result of such advice, and all such advice is given and accepted at Customer's risk.

c. Return. Upon the termination or expiration of a purchase order or this Agreement or upon the request of the Company, the Customer agrees to end all further use of, to immediately return to the Company the original version of, and to delete or destroy all copies of, any and all Confidential Information of the Company.

17. TRADEMARKS. Except as agreed to by Company in writing, Customer agrees not to (a) use Company's name in any form of publicity; or (b) use, create, register or market, directly or indirectly, in whole or in part, Company's names, logos, brands, or any other trademarks, or names that are now or may hereafter be owned by Company, as part of Customer's corporate or business name, as part of an internet domain name, uniform resource locator (URL), or in any way connected with Customer's business, trade address or other designations. Upon termination of this Agreement or upon the request of company for any reason, any use of Company's trademarks or names will be immediately discontinued.

18. LIMITED WARRANTY.

COMPANY MAKES NO OTHER WARRANTIES EXCEPT THOSE STATED IN COMPANY'S LIMITED WARRANTY IN EFFECT ON THE DATE COMPANY ACCEPTS EACH APPLICABLE PURCHASE ORDER ("LIMITED WARRANTY"). THE LIMITED WARRANTY MAY BE FOUND IN THE APPLICABLE PRICE BOOK AND ON THE ALLEGION CUSTOMER WEBSITE, WHICH TERMS ARE EXPRESSLY INCORPORATED HEREIN BY REFERENCE. COMPANY WILL MAIL CUSTOMER A HARD COPY OF THIS WARRANTY UPON CUSTOMER'S WRITTEN REQUEST. IN THE EVENT THAT CERTAIN DELIVERABLE WARRANTIES ARE NOT FURNISHED BY THE COMPANY TO CUSTOMER, COMPANY WARRANTS ONLY TO CUSTOMER THAT THE DELIVERABLES WILL BE FREE FROM DEFECTS IN MATERIAL AND WORKMANSHIP FOR A PERIOD OF 12 MONTHS FROM THE DATE OF SHIPMENT OF THE DELIVERABLES. COMPANY'S SOLE OBLIGATION UNDER THIS WARRANTY IS LIMITED TO REPAIRING OR REPLACING, AT COMPANY'S OPTION, THE DEFECTIVE DELIVERABLE, PROVIDED WRITTEN NOTICE OF THE DEFECT OR NONCONFORMANCE IS PROVIDED BY CUSTOMER WITHIN 30 DAYS OF DISCOVERY OF THE DEFECT OR NONCONFORMANCE. COMPANY DISCLAIMS ALL OTHER WARRANTIES, EXPRESS OR IMPLIED, WITH RESPECT TO THE DELIVERABLES, INCLUDING BUT NOT LIMITED TO, ANY IMPLIED WARRANTIES OF NON-INFRINGEMENT, MERCHANTABILITY, OR FITNESS FOR A PARTICULAR PURPOSE.

a. Exclusions. The provisions of this Limited Warranty do not apply to Deliverables that: (A) are not the proper size for the application; (B) are not installed in accordance with Company's published installation instructions; (C) are installed with improper or incorrect parts and/or are used for purposes for which they are not designed or intended; (D) have been repaired or altered without the Company's prior written consent; (E) have been subjected to misuse, abuse, negligence or accident; (F) have been improperly stored, installed, maintained or operated; (G) have been used in violation of written instructions provided by Company to Customer; (H) have been subjected to improper temperature, humidity, or other environmental conditions, or (I) have been affected by normal wear and tear. In addition, the provisions of this Limited Warranty do not apply to any defects or issues with the design or performance of equipment or products not manufactured by Company, nor does it apply to any code compliance or permit requirements for the assembly, installation, erection or construction of any goods. Company is not responsible for loss or damage resulting from use of Deliverables in conjunction with parts or systems not manufactured by Company. Accessories or products furnished by the Company, but manufactured by others, shall carry whatever warranty the manufacturers have conveyed to the Company and which can be passed to Customer.

b. Services. Company warrants that its services will be free from defects in material and workmanship for a period of 12 months from the date of completion of the particular items of service. Company's sole obligation under this service warranty is limited to repair or reperformance, at its option of the service, provided however, if repair or reperformance is either impractical or impossible, the Company will refund to Customer that portion of the price paid to Company for any defective service, provided written notice of the defect or nonconformance is provided by Customer within 30 days of discovery of the nonconformance.

c. Notification. Customer agrees to immediately notify Company in writing if any claim is made against Customer for any damages caused by any modules, parts, products, service or other Deliverables which may be the direct result of any defect in the manufacture of such aforementioned products. Customer agrees to cooperate with Company and its counsel in the defense of such claim and Customer agrees not to settle such claim without Company's written consent. If Customer fails to notify Company of such claim or fails to cooperate in such defense as aforesaid, then Company shall be discharged from any obligations under this Section and shall have no further liability to Customer.

d. Exceptions. The following costs and expenses are not covered by the provisions of these limited warranties: (i) labor costs for the removal and reinstallation of Deliverables or other manufacturer's products; (ii) shipping and freight expenses required to return Deliverables to Company; (iii) normal maintenance; and (iv) economic losses. In addition, the provisions of this warranty are not applicable to anything other than defects in Company's material (products only) or workmanship.

19. LIMITATION OF REMEDIES.

CUSTOMER'S EXCLUSIVE AND SOLE REMEDY ON ACCOUNT OF, OR IN RESPECT OF, THE FURNISHING OF NON-CONFORMING DELIVERABLES, SHALL BE TO (A) SECURE REPAIR OR REPLACEMENT OF THE PRODUCTS; OR (B) SECURE REPAIR OR RE-PERFORMANCE OF THE SERVICES OR TO OBTAIN A REFUND OF THE PRICE PAID FOR THE DEFECTIVE SERVICE, ALL AT COMPANY'S OPTION. IN NO EVENT WILL THE COMPANY'S MAXIMUM LIABILITY EXCEED THE SELLING PRICE FOR THE DELIVERABLE. THE WARRANTY, OBLIGATIONS AND LIABILITIES OF COMPANY (INCLUDING ITS SUPPLIERS) AND THE RIGHTS AND REMEDIES OF CUSTOMER ARE EXCLUSIVE AND ARE IN LIEU OF AND CUSTOMER HEREBY WAIVES AND RELEASES ALL OTHER WARRANTIES, OBLIGATIONS, REPRESENTATIONS OR LIABILITIES EXPRESS OR IMPLIED ARISING BY LAW, IN CONTRACT, TORT (INCLUDING NEGLIGENCE OR STRICT LIABILITY) OR OTHERWISE, INCLUDING BUT NOT LIMITED TO (I) ANY IMPLIED WARRANTY OF MERCHANTABILITY OR FITNESS FOR A PARTICULAR PURPOSE OR ANY WARRANTY IMPLIED THROUGH COURSE OF PERFORMANCE, COURSE OF DEALING, OR USAGE OF TRADE OR (II) CLAIMS ARISING OUT OF THE NEGLIGENCE OF COMPANY OR COMPANY'S SUPPLIERS OR (III) ANY OTHER CLAIM ARISING OUT OF, CONNECTED WITH, OR RESULTING FROM THE PERFORMANCE OF COMPANY OR FROM THE DESIGN, MANUFACTURE, SALE, REPAIR, LEASE OR USE OF THE DELIVERABLE, OR ANY COMPONENT THEREOF, DELIVERED OR RENDERED HEREUNDER OR OTHERWISE.

20. INDEMNIFICATION AND LIMITATION OF LIABILITY. a. Customer shall indemnify, defend and hold Company, and its officers, directors, employees, customers, Affiliates, suppliers, users and agents, (collectively the "Indemnitees") harmless from and against any and all damages, claims, losses, expenses, costs, obligations, liabilities, including without limiting the generality of the foregoing, liabilities for court costs and attorneys' fees, suffered directly or indirectly by an Indemnitee by reason of, or arising out of any injury, death or loss to any person, or injury to any property (collectively, "Damages"), received or sustained by any person(s) or property, arising out of, occasioned by, attributable or related to i) any breach of any representation or warranty made by Customer, its officers, directors, employees, affiliates, users, agents, representatives or customers to Company or any third party, (ii) any failure by

Customer to perform or fulfill any of its covenants, acts and/or omissions to Company or to any third party, or (iii) any litigation, proceeding or claim by any third party relating in any way to the obligations of Customer and/or the Deliverables sold by Company to Customer hereunder. Customer shall not consummate any settlement of any indemnified claim without the Indemnitees' prior written consent. Customer's obligation to indemnify Indemnitees will continue in full force and effect notwithstanding the termination or expiration of any order under this Agreement. In any claim against an Indemnitee by an employee of Customer or any subcontractor or anyone directly or indirectly employed by any of them or anyone for whose acts they may be liable, the indemnification obligations set forth in this Section shall not be limited in any way by or for Customer or any subcontractor under any applicable worker's compensation act, disability or other employee benefit act, or insurance coverage. This provision shall survive termination of any order or Agreement. **IN NO EVENT WILL COMPANY, ITS OFFICERS, DIRECTORS, EMPLOYEES, CUSTOMERS, AFFILIATES, USERS AND AGENTS, (NOR COMPANY'S SUPPLIERS) BE LIABLE FOR ANY INCIDENTAL, CONSEQUENTIAL, INDIRECT, SPECIAL, OR PUNITIVE DAMAGES OF ANY KIND OR NATURE UNDER ANY CIRCUMSTANCES INCLUDING, BUT NOT LIMITED TO, LOSS OF USE OF THE PRODUCTS, SERVICE INTERRUPTION, LOSS OF PROFITS, LOSS OF REVENUE, LOSS OF INTEREST, LOST GOODWILL, LOSS OF DATA, WORK STOPPAGE, IMPAIRMENT OF OTHER GOODS, LOSS BY REASON OF SHUTDOWN OR NON-OPERATION, INCREASED EXPENSES OF OPERATION, OR CLAIMS OF CUSTOMER'S CUSTOMERS, OR ANY OTHER LOSSES OR DAMAGES ARISING OUT OF ANY LACK OR LOSS OF USE OF THE DELIVERABLES WHETHER BASED ON CONTRACT, WARRANTY, TORT (INCLUDING, BUT NOT LIMITED TO, STRICT LIABILITY OR NEGLIGENCE), PATENT INFRINGEMENT, OR OTHERWISE, EVEN IF ADVISED OF THE POSSIBILITY OF SUCH DAMAGES.**

b) **INTELLECTUAL PROPERTY INDEMNITY.** Company makes no representation or warranty to the Customer that the Deliverables shall not infringe any intellectual property rights including, without limitations, claims arising from patent, copyright, trademark, trade secret, or other intellectual property infringement. Customer agrees to hold Company harmless from and defend the Company against any such claim of intellectual property infringement, including any Damages resulting from that claim, the cost of complying with any preliminary or permanent injunction, and all other costs of defense (including the attorneys' fees and costs), in connection with the foregoing.

c) To the extent that applicable law does not permit any limitations set out in this Agreement, such limitation shall not be applied or invoked. Nothing in this Agreement will be interpreted to disclaim liability of Company or the Indemnitees for gross negligence or willful misconduct. The limitations of remedy and liability herein shall not be interpreted to affect Company's obligations, if any, for claims for (i) property damage, (ii) personal injury, or (iii) wrongful death asserted by persons who are not parties to or beneficiaries of this Agreement. Further, the limitations of remedy and liability herein shall not be interpreted to limit Company's or Customer's right, if permitted by applicable law, to assert a claim for contribution among joint tortfeasors in connection with a claim by a person who is not a party to this Agreement.

21. CERTIFICATIONS. Certification of Deliverables for compliance with UL and ANSI standards are tested and performed by third-party independent laboratories. Any field modification or alteration of certified Deliverables will void certification and Company is not liable to Customer to certify any modified or altered Deliverable.

22. TERM FOR CLAIMS. NO ACTION ARISING OUT OF ANY CLAIMED BREACH OF THIS AGREEMENT BY COMPANY MAY BE BROUGHT BY CUSTOMER MORE THAN ONE (1) YEAR AFTER THE CAUSE OF ACTION HAS ARISEN.

23. CONSUMER PRODUCTS
WITH RESPECT TO "CONSUMER PRODUCTS" AS DEFINED UNDER THE MAGNUSON-MOSS WARRANTY ACT ("MMWA"), THE FOLLOWING STATEMENTS ARE MADE. (A) SOME STATES OR LOCAL LAWS DO NOT ALLOW LIMITATIONS ON HOW LONG AN IMPLIED WARRANTY LASTS, SO THE ABOVE LIMITATION MAY NOT APPLY TO YOU; (B) IF ANY IMPLIED WARRANTY IS PROVIDED UNDER THE MMWA, IT IS LIMITED TO THE DURATION OF THE WARRANTY PROVIDED IN SECTION 18 ABOVE. (C) SOME STATES OR LOCAL LAWS DO NOT ALLOW THE EXCLUSION OR LIMITATION OF INCIDENTAL OR CONSEQUENTIAL DAMAGES, SO THE ABOVE LIMITATION OR EXCLUSION MAY NOT APPLY TO YOU; AND (D) THIS WARRANTY GIVES YOU SPECIFIC LEGAL RIGHTS AND YOU MAY ALSO HAVE OTHER RIGHTS WHICH VARY FROM STATE TO STATE OR LOCATION TO LOCATION.

24. FORCE MAJEURE/EXCUSABLE DELAY. Any delay or failure of Company to perform its obligations hereunder will be excused to the extent that it is caused by an event or occurrence beyond Company's control such as, by way of example and not by way of limitation, acts of God, acts by any governmental authority (whether valid or invalid), governmental laws and regulations not presently in effect, fires, floods, windstorms, explosions, riots, natural disasters, wars, sabotage, accidents, labor problems (including, without limitation, lockouts, strikes, and slowdowns) at Company's facility, its source plant or their suppliers, inability to obtain power, material, labor equipment, or transportation, or court injunction or order. The delivery date will be extended for a time equal to that of the delay and the schedule for Company's performance will be deemed adjusted to that effect.

25. ENTIRE AGREEMENT AND AMENDMENT. This Agreement, together with the attachments, exhibits, webpages, or supplements specifically referenced and incorporated herein, constitute the entire agreement between Company and Customer with respect to the matters contained herein and supersede all previous communications, representations, or agreements, either oral or written between Company and Customer. No agreement or understanding varying or expanding this Agreement will be binding upon either party unless it is in writing and signed by a duly authorized representative of each party hereto.

26. CONFLICTS. In the event of any conflict or inconsistency between the terms of any agreement, or any part of an agreement or the various documents (including, but not limited to, electronic documents) between Company and Customer, unless the parties agree otherwise in writing, the various components of the agreements shall be given the following precedence (in descending order of precedence): a) any master agreement or long term agreement between Company and Customer; b) any specific terms, conditions and/or warranties of the individual products or Deliverables; c) the terms and conditions of this Agreement, and d) any purchase order.

27. UNSATISFACTORY CREDIT/TERMINATION FOR INSOLVENCY OR DEFAULT. Customer shall furnish Company with statements evidencing Customer's financial condition as Company may, from time to time, reasonably request, and shall notify Company immediately of any and all events that may have a material adverse effect on Customer's business or financial condition. If Company determines, in its sole discretion, that Customer's financial condition or creditworthiness is inadequate or unsatisfactory, then in addition to Company's other rights, Company may without liability or penalty, take any of the following actions: (i) modify the payment terms for any outstanding and/or future purchases; (ii) cancel any previously accepted orders; (iii) delay any further shipment of Deliverables to Customer; or (iv) any combination of the above.

Company may immediately terminate an order from Customer by giving written notice to Customer in the event of the happening of any of the following or any other comparable event: (i) insolvency of the Customer; (ii) filing of a petition in bankruptcy by or against the Customer; (iii) appointment of a receiver or trustee for the Customer; (iv) execution of an assignment for the benefit of creditors by the Customer, all of which will allow Company to demand reclamation of all affected orders; (v) Customer ceases or threatens to cease to trade; (vi) Company determines that Customer does not meet or no longer meets the credit requirements of Company or Customer's credit account is closed; (vii) any Customer violation of law, specifically including, without limitation, those laws set forth in this Agreement.

In the event of termination in accordance with this section, Company will not be obligated to accept any existing or additional orders from Customer and Company will be released from its obligation to deliver under orders accepted prior to such termination. The rejection or termination of any order by Company will not entitle Customer to any termination or severance compensation, or to any payment in respect to any goodwill established by Customer, or render Company liable for damages on account of the loss of prospective profits, or on account of any loss, expenditure, investment or obligation incurred or made by Customer.

No action taken under this Section 27 by Company (nor any failure of Company to act under this Section 27) will constitute a waiver by Company of any of its rights to enforce Customer's obligations, including the obligation of Customer to make payments as required under this Agreement. Upon termination of any order, all amounts owed by Customer to Company will become immediately due and payable, whether or not otherwise then due or payable.

28. CREDIT RISK ON RESALE OF DELIVERABLES. Customer is responsible for all credit risks with respect to, and for collecting payment for, all Deliverables sold to third parties (including End Users, installers, and/or general contractors) whether or not Customer has made full payment to Company for such Deliverables. The inability of Customer to collect payment for any Deliverable shall not affect Customer's obligation to pay Company for any Deliverable.

29. GOVERNING LAW; VENUE; AND EXPENSES. Any dispute or claim relating to this Agreement shall be governed by and construed according to the laws of the State of Indiana (excluding its conflict of laws principles); and not by the provisions of the 1980 United Nations Convention on the International Sale of Goods. Any disputes or claims shall be instituted and maintained in the courts of the State of Indiana. Customer consents to the exercise of jurisdiction over it by such courts and agrees that Indiana is not an inconvenient forum for any action arising from or relating to this Agreement. Customer agrees to pay for all expenses (including, but not limited to, collection costs, court costs and attorneys' fees) incurred by Company in enforcing the obligations of Customer under this Agreement.

30. RELATIONSHIP OF THE PARTIES. Nothing in this Agreement or any other document creates an employment, partnership, joint venture, or agency relationship between Company and Customer, including that of franchisee/franchisor. No party will have any power or authority to enter into any commitment on behalf of or otherwise bind the any other party on any matter. No employee of Customer will be deemed to be an employee of Company. If any provision of this Agreement is deemed to create a franchise relationship or business opportunity between the Parties, then Company may terminate any purchase order or this Agreement or the Parties shall negotiate in good faith to modify this Agreement so as to effect the original intent of the Parties as closely as possible in a mutually acceptable manner in order that the transactions contemplated hereby are consummated as a reseller agreement and not a franchise or business opportunity agreement.

31. SETOFF. Customer does not have the right to setoff or to back charge against any amounts which become payable to Company under this Agreement or otherwise. Company will not accept responsibility for backcharges for the cost of material or labor by Customer or any third party.

32. ELECTRONIC COMMUNICATIONS AND ELECTRONIC SIGNATURES. Both parties expressly agree to electronic transactions and acknowledge that documents they sign electronically will bind them to the same extent as a paper signature. Customer represents and warrants to Company that only employees authorized to bind Customer legally shall electronically sign any document under this Agreement. Customer shall comply with any method of electronic communication/payment processing specified by Company, including electronic funds transfer, pay-on-receipt processes/systems, order transmission, releases, electronic signature, and electronic communication systems, including, without limitation, the use of electronic data interchange ("EDI") portals. Notwithstanding the foregoing, e-mails, even those containing a signature block of one of Company's representatives, shall not constitute a signed writing.

33. COMPLIANCE WITH APPLICABLE LAWS.

a. General. Company and Customer will comply with all applicable federal, state and municipal laws, regulations, codes, ordinances and orders that pertain to the Deliverables, including but not limited to full compliance with any applicable provisions of The Health Insurance Portability and Accountability Act. Where the Customer is located outside the United States, or where the customer intends to ship the product outside the United States, the Customer shall be responsible for compliance with all U.S. export laws, and for filing all U.S. Electronic Export Information, as applicable.

b. The Customer acknowledges and agrees that: (i) it shall not violate applicable laws and regulations in performing its duties under this Agreement; (ii) it does not and shall not engage in any conduct that shall violate any applicable anti-bribery or anti-corruption laws or regulations; (iii) it (and its owners, officers, directors, employees and agents) shall not pay, offer, promise or authorize the payment of, either directly or indirectly, anything of value (including but not limited to cash, gifts and entertainment) to (a) any government official or employee of any government; (b) any official or employee of any department, agency, or instrumentality of a government; (c) any employee of any corporation or entity owned or controlled by a government; (d) any family member of such officials or employees; (e) any political party, party official, or political candidate; or (f) any other persons, owners, officers, directors, employees and agents of any corporation or entity; to improperly or illegally assist in obtaining or retaining business (including but not limited to any contracts, avoidance of duties or reduction of tariffs, reduction of taxes or

to obtain money owed, or to obtain regulatory approval) or for the purpose of causing, soliciting or inducing the sale and purchase of the Deliverables by any party, and (iv) it has full knowledge of and will comply with the Company's Code of Conduct for Business Partners as set forth on the Allegion customer website, **WHICH IS HEREBY INCORPORATED BY REFERENCE.**

c. The Customer shall indemnify and hold the Company harmless from any claim, demand, expense or cost arising from any breach of this Article.

d. The Customer shall permit the Company to conduct an audit or review of the Customer's financial books and records and business operations at such other times that the Company considers it necessary to confirm compliance with this provision. Such audit may be conducted by representatives of the Company or, at the Company's sole discretion, by a certified public accounting firm selected by the Company. The Customer shall cooperate with any inquiries from the Company's Ethics & Compliance Group.

e. A violation of this provision constitutes a material breach of this Agreement and the Company may terminate any purchase order or this Agreement immediately, with no opportunity to cure, in accordance with Section 27 of this Agreement.

f. Notwithstanding the foregoing provisions of this Section 33, (i) Company is not responsible for obtaining or maintaining any permits for the performance of services or the verification or compliance with any code requirements relative to the performance of services, (ii) to the extent any sale of Deliverables pursuant to this Agreement may require approval of the U.S. Government, Company's obligations under this Agreement are conditioned upon the grant of such approval and upon compliance by Customer with any restrictions imposed by the U.S. Government in connection with such approval, and (iii) in the event the Deliverables are to be used in a nuclear facility, the Customer shall, prior to such use, arrange for insurance or governmental indemnity protecting Company against liability. The Customer hereby releases and agrees to indemnify Company and its suppliers for any nuclear damage including, but not limited to, loss of use, in any manner arising out of the nuclear incident, whether alleged to be due, in whole or in part by Company or its suppliers.

g. No Inducements. Each party represents to each other that neither it nor any person acting on its behalf has, in contravention of any applicable law, given or offered to give or will give or offer to give, any sum of money or other material consideration to any person, directly or indirectly, as an inducement to obtain business hereunder or to influence the granting of licenses or other governmental permissions to enter into this Agreement or perform obligations hereunder.

h. Equal Employment Opportunity. Company is a U.S. federal contractor that complies with Executive Order 11246, as amended, and applicable regulations in 41 CFR Parts 60-1 through 60-60, 29 U.S.C. § 793 and applicable regulations in 41 CFR § 60-741; and 38 U.S.C. § 4212 and applicable regulations in 41 CFR Part 60-250 and 60-300. **THE FOLLOWING PROVISIONS ARE INCORPORATED HEREIN BY REFERENCE:** Executive Order 11246, as amended by Executive Order 13672, and 41 CFR § 60-4.3(a); Executive Order 11701 and 41 CFR §§ 60-250.5(a), 60-300.5; Executive Order 11758 and 41 CFR § 60-741.5(a); U.S. immigration laws, including the L-1 Visa Reform Act of 2004 and the H-1B Visa Reform Act of 2004; and Executive Order 13496.

i. Ethical Business Conduct. Customer shall adopt and comply with Company's Business Partner Code of Conduct which is **EXPRESSLY INCORPORATED HEREIN BY REFERENCE.**

34. REPRESENTATIONS AND WARRANTIES. Customer represents, warrants and covenants to Company that: (a) it has the right, power, and authority to enter into this Agreement and fully perform its obligations hereunder; (b) it has all necessary rights in and to its respective Content and Marks for use within the scope of this Agreement, including the licenses granted herein; and (c) it complies, and at all times shall comply, with all laws, rules, and regulations in effect that are applicable to its performance under this Agreement, including obtaining all such approvals and/or permits as may be required hereunder.

35. NO THIRD-PARTY BENEFICIARY. Each party is entering into this Agreement solely based on the representations contained herein for its own purposes and not for the benefit of any third party.

36. NOTICES AND CHANGE OF ADDRESS. All notices or other communications under this Agreement shall be in writing and delivered in person, or sent by receipted courier, express mail, e-mail, or postage prepaid certified or registered mail, addressed to the party for whom it is intended, at the addresses set forth in this Agreement. Either party may change its address for notice by giving written notice to the other party. Any notice or other communication shall be deemed given no later than the date actually received. Notice by courier, express mail, certified mail, or registered mail shall be deemed given on the date it is officially recorded as delivered and, in the absence of such record of delivery, it shall be rebuttably presumed to have been delivered on the third Business Day after it was deposited. Notices sent by e-mail require tangible confirmation of receipt from addressee.

37. ASSIGNMENT. Customer may not assign this Agreement without the prior written consent of Company. Company may assign its rights and delegate its duties under this Agreement, without the prior consent of Customer, to an Affiliate, or to a third party in the event of a spin-off, merger, business combination, consolidation or sale of all, or substantially all, of its assets or business that are related to this Agreement. The rights and duties in this Agreement shall bind and inure to the benefit of any such assignee.

38. SEVERABILITY. If any provision of this Agreement is held to be invalid, illegal, or unenforceable under any statute, regulation, ordinance, executive order, or other rule of law, that provision will be deemed severed to the extent necessary to comply with such statute, regulation, ordinance, order, or rule. In the event such provision is deemed severed, the parties will negotiate in good faith to arrive at an alternative arrangement approximating the original business objective of the parties. The remaining terms and conditions of this Agreement will remain in effect.

39. NO IMPLIED WAIVER. The failure of either party at any time to require performance by the other party of any provision of this Agreement will in no way affect the right to require such performance at any time thereafter, nor will the waiver of either party of a breach of any provision of this Agreement constitute a waiver of any succeeding breach of the same or any other provision.

40. MISCELLANEOUS. (a) This Agreement does not make either party the agent or legal representative of the other party. Neither party is authorized to create any obligation on behalf of the other party including, but not limited to, the obligation for payment of any service or warranty obligation hereunder; (b) The rights and remedies herein reserved to Company are cumulative and additional to any other rights and remedies provided at law or equity; (c) The official text of this Agreement is in the English language. If this Agreement is translated into another language, the English text will govern any question with respect to interpretation; (d) The headings in this Agreement are for convenience of reference only and do not affect the meaning of this Agreement in any manner.

DEFINITIONS.

Capitalized terms have the meanings set forth in this Section, or in the Section in which they first appear in this Agreement.

"Agreement" means these Allegion Terms and Conditions of Sale and Service, together with any applicable Country Supplement or Region Supplement provided by Company, and all of the documents referenced herein or therein.

"Affiliate" means any Person that directly or indirectly, through one or more intermediaries, controls, is controlled by, or is under common control with, the Company. The term "control" (including the terms "controlled by" and "under common control with") means the possession, directly or indirectly, of the power to direct or cause the direction of the management and policies of a Person, whether through the ownership of voting securities, by contract or otherwise.

"Business Day" means any day except Saturday, Sunday or any other day on which commercial banks located in the United States are authorized or required by Law to be closed for business.

"Company" means Schlage Lock Company, LLC or any subsidiary or affiliate thereof selling products that are part of the Allegion product portfolio. Schlage Lock Company and/or its subsidiary or affiliates will be severally but not jointly liable under the Agreement.

"Company Marks" refers to the Marks of Company.

"Confidential Information" shall mean any and all information provided by either party to the other party pertaining to the disclosing party's business. Confidential Information shall include, but not be limited to, any bitting lists, formulae for products, manufacturing processes, production techniques, packaging processes, methods, research materials, ideas, marketing plans and related materials, quality standards, test results and data, apparatus, engineering drawings, contract documents, computer software, hardware, or firmware, business activities information such as financial information, reports, projections, books and records, customer and supplier information, and operations, customer and supplier lists and data, specifications, know how, and other Proprietary Information or Trade Secrets (as defined herein) that either party may furnish to the other party. Confidential Information shall not include information that: (a) is or becomes publicly known if such public knowledge or disclosure is not the result of any act or failure to act on the part of the receiving party; (b) is, at the time of disclosure, already known to the Receiving Party without utilizing the Confidential Information; (c) is information disclosed to the Receiving Party by a third party which is not to the Receiving Party's knowledge, after inquiry of the third party, under a duty of confidentiality to the Disclosing Party; or (d) is independently developed by the Receiving Party without the use of Confidential Information. The Receiving Party shall have the burden of proof as to prior knowledge and absence of breach. Confidential Information may be furnished in any tangible or intangible form including, but not limited to, writings, drawings, computer and other electronic media, logic diagrams, component specifications, graphs, prototypes, samples, or verbal communications and regardless of whether such information is marked or designated as "confidential." For the avoidance of doubt, all information, knowledge or data disclosed by Company to Customer, regardless of whether disclosed in written, tangible, oral, visual or other form, including, without limitation, sample products, equipment, software, or other objects or material, provided by Company to Customer, and all information, knowledge or data which was obtained by Customer from visits to Company's facilities, shall be considered "Confidential Information" under this Agreement.

"Content" means all information (including without limitation any text, music, sound, photographs, video, graphics, data or software), in any medium, on a particular Company Web page or Website or in Marketing Materials.

"Customer" means the purchaser of Deliverables from Company.

"Deliverables" means any good or service or both purchased by Customer from Company under these General Terms and Conditions of Sale and Service.

"End Users" means the purchaser that (a) has acquired a Deliverable from Customer for (i) its own and its Affiliate's/Affiliates' internal use and not for resale, remarketing or distribution or (ii) incorporation into its own products and (b) is an individual or entity, other than any federal, state or local agency, office or division.

"IP" means all intellectual property and industrial property rights comprising or relating to/ of the following: (a) Patents; (b) Trademarks; (c) internet domain names, whether or not Trademarks, registered by any authorized private registrar or Governmental Authority, web addresses, web pages, website and URLs; (d) works of authorship, expressions, designs and design registrations, whether or not copyrightable, including copyrights and copyrightable works, software and firmware, application programming interfaces, architecture, files, records, schematics, data, data files, and databases and other specifications and documentation; (e) Trade Secrets; and (f) all other intellectual property and industrial property rights, and all rights, interests and protections that are associated with, equivalent or similar to, or required for the exercise of, any of the foregoing, however arising, in each case whether registered or unregistered and including all registrations and applications for, and renewals or extensions of, such rights or forms of protection pursuant to the Laws of any jurisdiction throughout in any part of the world.

"Marketing Materials" means all marketing brochures, buckslips, pamphlets, emails, text, call scripts or other material, whether in printed format, audio or audiovisual format, or in any other format, that contain any (i) Content relating to the Company Deliverables or (ii) Company Marks.

"Marks" means collectively the domain names, trademarks, trade names, service marks, trade dress, logos, and the like used or provided by either party for use in connection with this Agreement.

"Patents" means all patents (including all reissues, divisionals, provisionals, continuations and continuations-in-part, re-examinations, renewals, substitutions and extensions thereof), patent applications, and other patent rights and any other Governmental Authority-issued indicia of invention ownership (including inventor's certificates, petty patents and patent utility models).

"Person" means a person or entity.

"Price Books" mean Company's current Price Book in effect for the applicable Deliverable being purchased by Customer.

"Trade Secrets" means and includes business or technical information of either party, including processes, formulas, devices, techniques, compilations and other material that a party attempts to maintain in secret and that derive commercial value for such party from not being generally known to the public or readily ascertainable through independent development or reverse engineering.

Finishes

See device finish pages for available finishes offered for each device.

BHMA	US	Description
605	US3	Brass, Polished
	US3A	Brass, Polished - no lacquer
606	US4	Brass, Satin
	US4A	Brass Satin - no lacquer
611	US9	Bronze, Polished
612	US10	Bronze, Satin
613	US10B	Bronze, Oil-Rubbed Satin
619	US15	Nickel, Satin
625	US26	Chrome, Polished
626	US26D	Chrome, Satin
	US26D-AM	Chrome, Satin with Antimicrobial Coating

BHMA	US	Description
628	US28	Aluminum, Anodized
629	US32	Stainless Steel, Polished
630	US32D	Stainless Steel, Satin
	US32D-AM	Stainless Steel, Satin with Antimicrobial Coating
689	SP28	Aluminum, Sprayed
693	SPBLK	Black, Painted (not flat powder)
695	SP313	Sprayed Duranodic
710	313	Duranodic Dark Bronze
711/622	315/US19	Flat Black
	643E	Aged Bronze

SPLIT FINISHES:
When split finish is desired, the finish listed first is understood to be the finish on the trim/control on the outside of door.

TOUCHBAR TRIM FINISHES:
When purchased as part of a device, optional touchbar trims are furnished at no additional charge. See device finish page for available finishes per device.

SPECIAL FINISHES
Optional powder coat finishes available on 33A, 35A, 55, 88, 94, 95, 98, 99, XP98 and XP99 Series devices. To have a specific color matched and powder coat availability please contact:

TIGER Drylac U.S.A., Inc.
1100 Commons Blvd.
Reading, PA 19605 USA
800-243-8148
www.tiger-coatings.us

Powder coat must be selected from Tiger Drylac **Series 38 or 49**.
Please specify **both** the full powder coat product number and the RAL number when placing your order with Von Duprin. **Example: 49/15320 RAL 1015**

CUSTOM GRAPHICS
Custom logo or unique artwork on push bar trim is available. Must provide a graphic file of artwork to be applied. The graphic should be native (not scaled) and must not exceed 16"x2". File format should be in Photoshop or .TIFF file format. The graphic file should be emailed to VDI_Specials@allegion.com. Contact customer care for more details.
List add $**94**/device plus non-discountable **$250** set-up charge per order.

SPECIAL FINISH PRICING
33A, 35A, 94, 95, 98, 99, XP98, XP99 devices .....24% list add to US28 price
22 devices .....24% list add to SP28 price, special finishes limited to 622, 706, 691, and 693
55 and 88 devices .....24% list add to US4 price
Steel Mullions .....24% list add to SP28 price
For other finishes not listed in this pricebook, consult factory for pricing.

REFERENCE
Devices ordered in US28 and US32D will be supplied with Trims in US26D unless SS levers are specified.

Von Duprin Exit Devices 33A/35A, 94/95, 98/99	L-Lock	ND	AL	S	F/FA
01	01				
02	02				
03	03	Tubular			
05	05				
06	06	Rhodes	Saturn	Saturn	Elan
07	07	Athens	Jupiter	Jupiter	Jazz
12	12				Manhattan
17	17	Sparta	Neptune	Neptune	
18	18				
Latitude	Latitude				Latitude
Longitude	Longitude				
16	Omega	Omega	Omega		
Asti	Asti			Flair	Flair
Merano	Merano				Merano
Accent	Accent				Accent

Note: Table shows matching lever styles among brands for suiting purposes.

M Collection Levers

Von Duprin 98/99, 94/95, 33A/35A
Schlage L, LT

M51

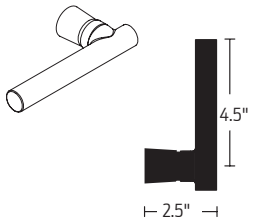

M52

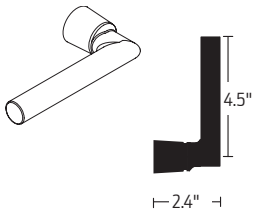

M53

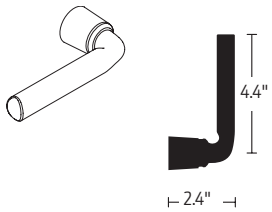

M54

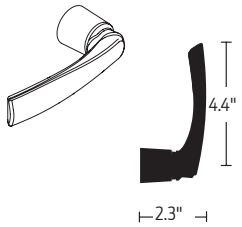

M55

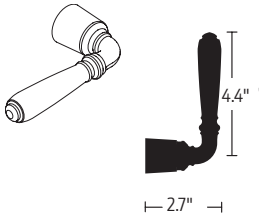

M56

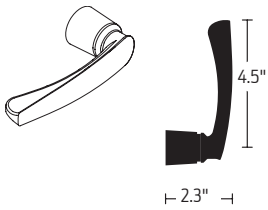

M57

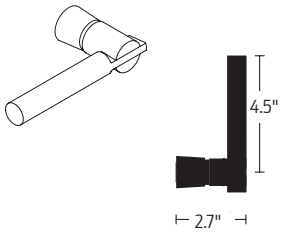

M61 (handed)

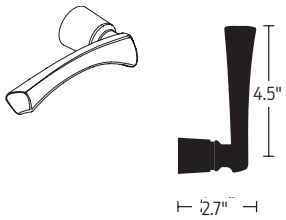

M62 (handed)

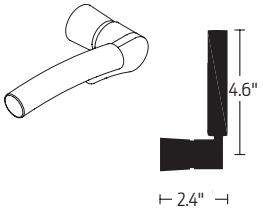

M63 (handed)

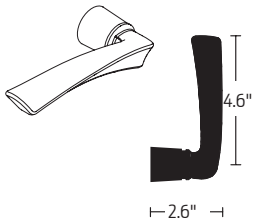

M81

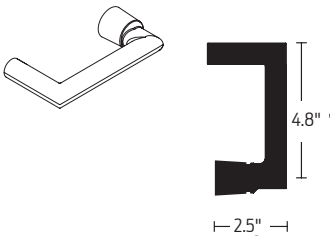

M82

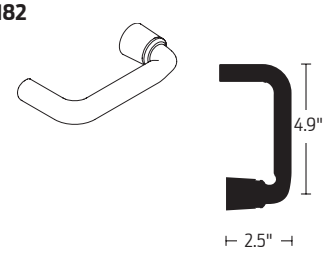

M83

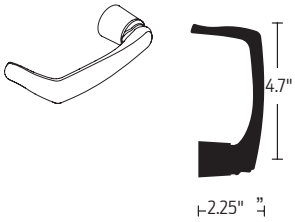

M84

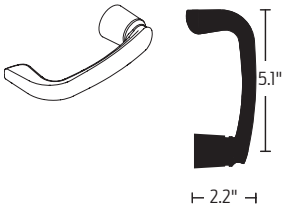

M85 (handed)

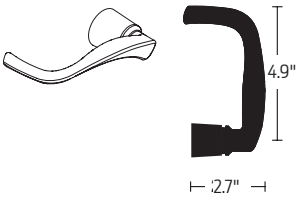

ME1

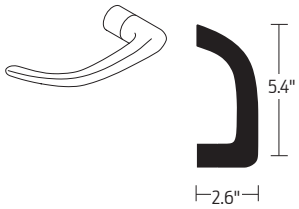

ME2

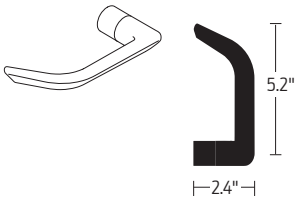

ME3

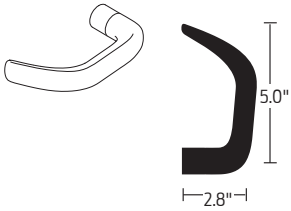

DOOR WIDTHS
EXIT DEVICES for door widths exceeding 4'0" are custom applications. Door width is assumed 3'0" unless specified otherwise. Specify the exact door width and consult factory for price or see page 17.

DOOR THICKNESS
EXIT DEVICES are furnished at prices listed for door thicknesses of 1-3/4" and 2-1/4" with standard centerlines. Other door thicknesses and/or offset installations may require additional charges for the device, trim, control and/or strike. Consult factory for price or see pages 15, 16, and 17.

DOOR HEIGHTS/DEVICE CENTERLINE
SURFACE VERTICAL ROD DEVICES are furnished at prices listed for door heights up to 7'0". For heights above 7'0", extension rods are furnished at prices shown on page 102. For doors higher than 10'0" or when centerline is other than standard, specify exact height and/or centerline. Consult factory for price or see device page. ADA centerline of 37" is available at no additional charge, must be specified. Door height is assumed 7'0" unless specified otherwise.

CONCEALED VERTICAL ROD DEVICES are furnished at prices listed for door heights 6'8" to 8'4" on touch bar devices, and up to 8'0" on crossbar devices. For extension rods up to 10'0", see page 102 for prices. For heights other than this or when centerline is other than standard, specify exact height. Consult factory for price or see device page. Door height is assumed 7'0" unless specified otherwise.

HANDING
DEVICES: Furnished RHR when handing is not specified.
LEVER TRIMS: Trims are furnished RHR when handing is not specified.

CYLINDERS
We do not offer custom keying.

MARKING CARTONS
Markings (e.g., door locations, stock reference numbers) on acknowledgements and individual product cartons will be provided at no additional charge.

SUBSTITUTION OF OUTSIDE TRIM OR STRIKES
When standard is not desired, deduct price of standard and add price of item used. Check catalog for compatibility.
Refer to device Product Catalogs for specific door application strike requirements.

ELECTRIC ACCESSORIES
When specifying Electrical Products, consult Product Catalog or factory to insure all required accessories have been specified.

PRODUCT CATALOGS
Refer to the Product Catalogs for required accessories and specific requirements.

LEVER DESIGNS
- The #06 lever is furnished standard.
- Optional lever designs, #01, #02, #03, #05, #07, #12, #16, #17, #18, Accent, Asti, Merano are available at no additional charge.
- Optional Stainless Steel levers, 03 SS, 06 SS, 17 SS, Latitude SS and Longitude SS are available at no additional charge.
- Optional Brass levers, Latitude and Longitude are available at no additional charge.
- Optional Knurled Levers available on #02, 03, 07, and 17 Lever designs. M51, M52, and M81 lever designs can be supplied Knurled as a Special. Refer to Device pages for Levers offered per device.

How to Order

Sequence Example

EL	98	27	L	F	—	US26D	3'	RHR	LBR	US26D	996/ US26D	299F/ 06	SNB	HM

Prefixes

None	Standard		
AX	Accessible Device	RX	Request to Exit
CD	Cylinder Dogging - Panic Only	RX2	Double Request to Exit
CX	Chexit	SD	Special Dogging - Panic Only
E	Electric Locking Mortise/Lever		
EL	Electric Latch Retraction	SS	Signal Switch
HH	Huricane Device	WS	Windstorm (FEMA rated) Surface Vertical Rod Exit Device
LX	Latch Bolt Monitoring		
PL	Pullman Latch		
PN	Pneumatic Latch Retraction	XP	Heavy Protection - Rim
QEL	Quiet Electric Latch Retraction		

Device Series

22	Push Bar Device	88	Cross Bar Device
33A/35A	Push Bar Device	94/95	Recessed Device
55	Cross Bar Device	98/99	Push Bar Device

Device Type

None	Rim Device
27	Surface Mounted Vertical Rod Device
47	Concealed Vertical Rod Device
47WDC	Concealed Vertical Rod Wood Door Device
48	Concealed Vertical Rod Device
49	Concealed Vertical Cable Device (see CVC how to order form)
50WDC	Concealed Vertical Cable Wood Door Device
57	Three-Point Latch Device
75	Mortise Lock Device

Trim Functions

EO	AD Trim (to come from client)	L-NL	Lever, Rigid - Night Latch
DT	Dummy Trim	NL	Night Latch
EO	Exit Only	NL-OP	Night Latch Cylinder Assembly, Optional Pull
HL	Hospital Pull Trim	TL	Turn Lever
K	Knob	TL-BE	Turn Lever - Blank Escutcheon
K-BE	Knob - Blank Escutcheon	TP	Thumbpiece
K-DT	Knob, Rigid - Dummy Trim	TP-BE	Thumbpiece - Blank Escutcheon
K-NL	Knob, Rigid - Night Latch		
L	Lever (Classroom)		
L-BE	Lever - Blank Escutcheon		
L-DT	Lever, Rigid - Dummy Trim		

Rating

		Blank	Panic Exit Hardware
F	Fire Exit hardware		

Suffix

		-2SI	Double Cylinder with Security Indicator
-2	Double Cylinder		

Finish

US3, US4, US10,US 15, US26, US26D, US26D-AM, US28, US32D, US32D-AM, 313, 315

Door Width

		Door Thickness	
3'	Standard Default		
4'		1-3/4"	Standard
2'		2-1/4"	Optional

Handing

RHR	Right Hand Reverse	LHR	Left Hand Reverse

Less Bottom Rod/Cable

LBR	Less Bottom Rod	LBR-AFL	LBR with Fire Pin
LBL	Less Bottom Cable	LBL-AFL	LBL with Fire Pin

Trim Options/Finish

See trim options/finish for each series

Trim Options/Finish

See trim options for each series

Lever Style

06 Standard Default
Optional Levers available

Accessories

CYL	Cylinder	SEC	Security Screws
GBK	Glass Bead Kit	SLM	SLM Blocking
SNB	Sex Bolts		

Other Information

Touchbar Options	BRAILLE (Vision impaired touchpad, Raised letter, and Braille), PUSH (Touchbar trim embossed "PUSH') RSS (Red silk-screened lettered touchbar trim), KN (Knurled Touchbar), SG (Safety Glow)
Miscellaneous	CE (CE Labeled), LCP (Less Cover Plate), 10WDA (#10WDA Cover Plate), RAT REL (Ratchet Release Assy), WH (Weep Holes)
Door Material	AL (Aluminum Door), HM (Hollow Metal), WD (Wood Door) , CP (Composite Door) INS2 (Insulclad - 1/2"), INS4 (Insulclad - 1/4"), SC (Steelcraft, HH Device Only)
Door Application	D (Double Egress), P (Pair of Doors) , S (Single Door)

Note: Not all options are listed. Not all options are available on all series. See the specific series pages for complete options available. Please contact customer care for questions.

Prices subject to change without notice.

VON DUPRIN®

Mortise Lock Order Form

(for door thickness between 2 ¼" – 4 ½")

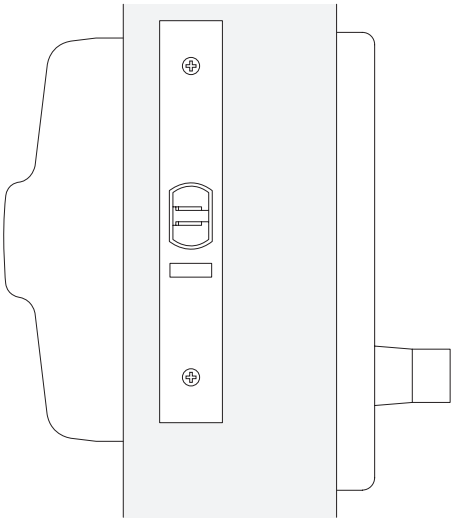

Mortise lock towards device (Push) side

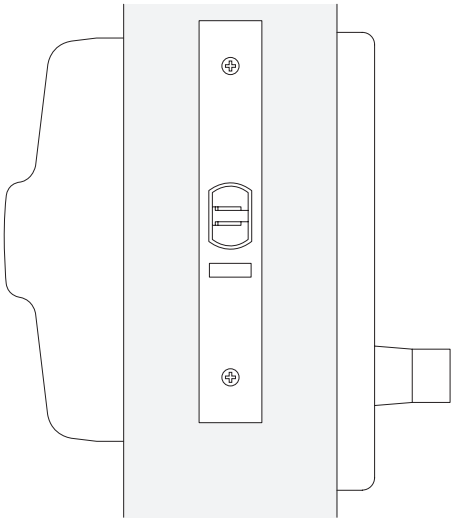

Mortise lock centered

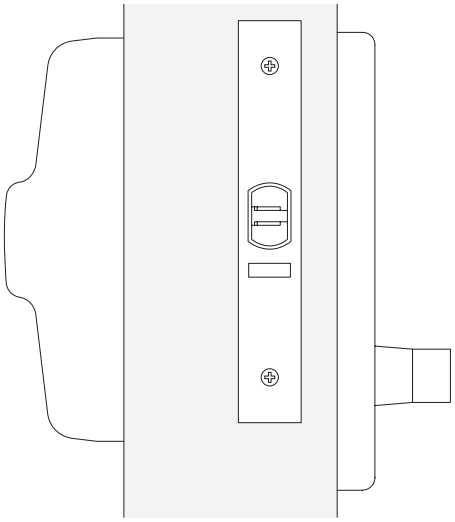

Mortise lock towards trim (Pull) side

1. Select mortise lock position (using illustration above). Please check box in left column to indicate lock location.	
	Push side. Please provide centerline dimension from **push side.**
	Center. Please provide centerline dimension from **center.**
	Pull side. Please provide centerline dimension from **pull side.**
2. Specify door thickness.	
	Please provide **door thickness** in box to the left.
3. Specify mortise lock configuration (5575 / 8875 / 98/9975 / -F). Example: 9875-EO x 3' x US26D.	
_____	

Products to be supplied:

Mortise device - lock towards device (push) side - Special strike - Special screw pack - Special trim (if not EO)	**Mortise device** - lock centered - Special device - Special strike - Special trim (if not EO)	**Mortise device** - lock towards trim (pull) side - Special device

Special Order Products

Prices subject to change without notice.

Door Thickness - Devices Only

Prices shown are for a door thickness over 2-1/4" up to 4-1/4".
Trims for a door thickness other than standard are priced separately on pages 16 and 17.
NOTE: Other special door and frame conditions may require additional charges. Consult factory for pricing.

Model	Description	List Add	Notes
22 Series			
22	No specials are available on the 22 Series.	n/a	
55 Series			
55	Rim Device	89	Special Screw Pack
5575/5575-F	Mortise Device, Lock towards device (push) side	282	Special Device Special Screw Package Special Trim (if not EO)
	Mortise Device, Lock centered	542	Special Device Special Strike Special Trim (if not EO)
	Mortise Device, Lock towards trim (pull) side	521	Special Device
5547/5547WDC/-F	Concealed Vertical Rod Device	89	Special Screw Pack
88 Series			
88/88-F	Rim device with sexbolts	89	Special Screw Pack
8875/8875-F	Mortise Device, Lock towards device (push) side	275	Special Strike Special Screw Package Special Trim (if not EO)
	Mortise Device, Lock centered	525	Special Device Special Strike Special Trim (if not EO)
	Mortise Device, Lock towards trim (pull) side	242	Special Device Special Screw Package
98/99 Series			
98/9975/-F	Mortise Device Lock towards Device(Push) Side	282	Special Strike Special Screw Package Special Trim (if not EO)
	Mortise Device Lock Centered	542	Special Device Special Strike Special Trim (if not EO)
	Mortise Device Lock towards Trim(Pull) Side	250	Special Device Special Screw Package

Location of Mortise Lock must be provided when ordering.

Prices subject to change without notice.

Special Order Products

Door Thickness - Trims Only

Prices shown are for a door thickness over 2-1/4" up to 4-1/4". See specific product below for maximum door thickness. Devices for a door thickness other than standard are priced separately on page 15.
NOTE: Other special door and frame conditions may require additional charges. Consult factory for pricing.

Model	Description	List Add	Special Items Required
33A/35A Series Trim			
386DT and NL	Dummy or Night Latch Trim	89	Screw Pack for Device
388	Night Latch Cylinder Trim - 33A/35A	89	Screw Pack for Device
550DT	Dummy Trim	89	Screw Pack
392-6	Dummy Trim	89	Screw Pack
55 Series Trim			
550DT	Dummy Trim	89	Screw Pack
555NL/556NL	Night Latch Trim	89	Screw Pack
555NL-CA/556NL-CA	Night Latch Cylinder Assembly	89	Screw Pack
110MD-NL/WD-NL	Night Latch Cylinder Assembly	89	Screw Pack
88 Series Trim			
880EO, DT or NL	Exit Only, Dummy or Night Latch Trim	89	Screw Pack
880/608TP/TP-BE	Thumbpiece, up to 3-1/4"	240	Thumbpiece and Screw Pack
	Thumbpiece, over 3-1/4" up to 4-1/4"	402	Thumbpiece and Screw Pack
880/606K/K-BE/K-NL	Knob, up to 4-1/4"	304	Spindle and Screw Pack
880K-DT	Knob Dummy	89	Screw Pack
608DT or NL	Dummy or Night Latch Trim	89	Screw Pack
606K-DT	Knob Dummy	89	Screw Pack
98/99 Series Trim			
990EO, DT or NL	Exit Only, Dummy or Night Latch Trim	89	Screw Pack
696/697DT or NL	Dummy or Night Latch Trim	89	Screw Pack
990/696/697TP/TP-BE	Thumbpiece, up to 4-1/4"	249	Thumbpiece and Screw Pack
996K/K-BE/K-NL	Knob	294	Spindle and Screw Pack
996K-DT	Knob Dummy	89	Screw Pack
996EO	Exit Only Plate	166	Screw Pack and Studs
996L/L-BE	Lever up to 4"	521	Finger and Studs
996L-NL	Night Latch Lever up to 4"	105	Studs
996L-DT	Lever Dummy up to 4"	105	Screw Pack
392-7	Dummy Trim	85	Screw Pack

Prices subject to change without notice.

Door Thickness - Controls Only

Prices shown are for a door thickness over 2-1/4" up to 4-1/4".
Devices for a door thickness other than standard are priced separately on page 15.
NOTE: Other special door and frame conditions may require additional charges. Consult factory for pricing.

Model	Description	List Add	Special Items Required
Controls			
371L/LBE	Lever	315	Cam and Screw Pack
373L/L-BE	Lever, up to 3-3/8" dr for 88L	87	Screw Pack
	Lever, over 3-3/8" up to 4-1/4" for 88L	422	Spindle and Screw Pack
	Lever, up to 2-11/16" for 8827L	87	Screw Pack
	Lever, over 2-11/16" up to 4-1/4" for 8827L	422	Spindle and Screw Pack
	Lever, up to 3-5/8" for 8875L	87	Screw Pack
	Lever, over 3-5/8" up to 4-1/4" for 8875L	422	Spindle and Screw Pack
373L-DT	Lever Dummy	87	Screw Pack
375L/L-BE	Lever, up to 3-5/8" for 5575L	87	Screw Pack
	Lever, over 3-5/8" up to 4-1/4" for 5575L	422	Spindle and Screw Pack
375L-DT	Lever Dummy	87	Screw Pack
378L/L-BE	Lever	315	Cam and Screw Pack
379L/L-BE	Lever	422	Spindle and Screw Pack
374T/T-BE	Thumbturn	246	Rod Member and Screw Pack
376T/T-BE	Thumbturn	441	Rod Cam and Screw Pack
376T-WDC/T-BE	Thumbturn	441	Rod Member and Screw Pack
377T/T-BE	Thumbturn, 2" door	235	Rod Cam and Screw Pack
377T/T-BE	Thumbturn, over 2 1/4" door	441	Rod Cam and Screw Pack

Door Width - Devices Only

Prices shown are for a door widths over 4' up to 6'.

Model	Description	List Add	Notes
33/35/98/99 Series			
> 4' up to 5'	All finishes	219	Device will ship less label
33/35/98/99 Series			
> 5' up to 6'	All finishes	301	Device will ship less label
55 or 88 Series			
> 4' up to 5'	US26D or US26	268	Device will ship less label
> 4' up to 5'	US3, US4, US10, US10B, SPBLK	420	Device will ship less label

Note: Device will be supplied with a 49" reinforcement crossbar kit. Actual crossbar length is 54".

55 or 88 Series			
> 5' up to 6'	US26D or US26	351	Device will ship less label
> 5' up to 6'	US3, US4, US10, US10B, SPBLK	507	Device will ship less label

Note: Device will be supplied with a 61" reinforcement crossbar kit. Actual crossbar length is 66".

For Special Order Product Quotes: Email: VDI_Specials@allegion.com Fax:1-877-730-6248

Prices subject to change without notice.

Special Order Products

	List Add	Notes
Special Device Types		
Modified California Special - Centerline at 38"	519	5547WDC Only
Balanced Door - 3' Device with 4' Mechanism Case	90	33/35/98/99 Series
Special Trims		
990 with 697 Pull	79	
Special Electric Strike		
6221/6223/6226 with "A" Back Box	84	
Special Mullion		
Aluminum Mullions >10' up to 11'	844	5654/5754
Steel Mullions >10' up to 14'	564	1654/4754/4854/4954/9854/9954
Special Centerline (other than 39-11/16")		
Steel Mullion	98	
Aluminum Mullion	435	
ADA centerline height of 37" is available at no additional charge, must be specified.		

Prices subject to change without notice.

Exit Devices

Prices subject to change without notice.

22 Series • Finish Chart

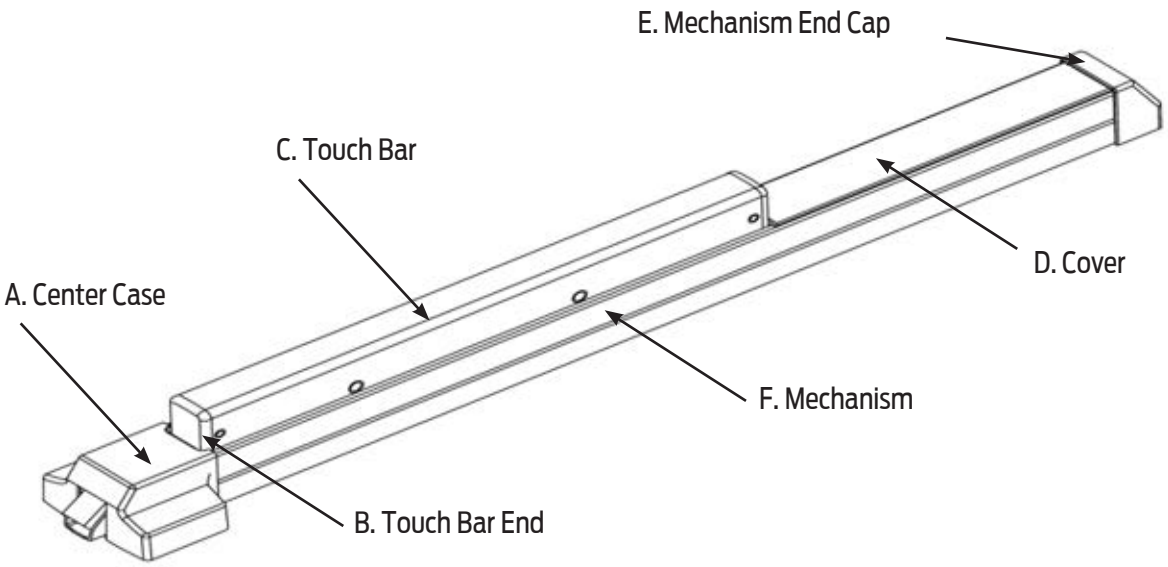

Standard Finishes

Color	US Number	BHMA Number	A, B, E	C -Touch Bar Trim Finishes	D, F
Sprayed Aluminum	SP28	689	(A) Powder Coat (B, E) Molded Plastic	Sprayed Aluminum SP28, 689	Powder Coat
Duranodic Dark Bronze	SP313	695	(A) Powder Coat (B, E) Molded Plastic	Powder Coat SP313, 695	Powder Coat

22 Series Sex Bolt Quantities

Application	Sex Bolt 425 (Optional)	With 499 Strike 425 Sex Bolt (Optional)	325 Sex Bolts For SV Latches (Supplied)
EO (exit only device)	6	8	4
NLOP Device with 110 MD/WD	6	8	4
EO Device with 230EO trim	2	4	4
K, KBE, DT or NL Device with 210 trim	2	4	4
L, LBE, TP or TPBE Device with 230 trim	2	4	4

Note: Sex bolts are supplied for use on wood and composite fire doors.

Prices subject to change without notice. Indicates products that have EPD documentation available and meet LEED v4.

EXIT HARDWARE

Type of Device

22 (Rim)	**2227** (Surface Vertical Rod)

Function

EO (Exit Only)	**DT** (Dummy Trim)	**L** (Lever-06 Standard)	**LBE** (Lever-Blank Escutcheon)
NL (Night Latch-Key Retracts)	**NLOP** (Night Latch, Opt. Pull)	**K** (Knob)	**KBE** (Knob - Blank Escutcheon)
TP (Thumbpiece)	**TPBE** (Thumbpiece, Blank Escutcheon)		

Rating

None (Panic Exit Device)	**- F** (Fire Exit Device)

Device Finish

SP28 (Sprayed Aluminum)	**SP313** (Duranodic Dark Bronze)

Device Length (Feet and Inches)

3' (3' Device for 2' 4" - 3' Door)	**4'** (4' Device for 2' 10" - 4' Door)

Device Handing:

RHR (Right Hand Reverse)	**LHR** (Left Hand Reverse)

Dogging Options

LD (Less Dogging)

Device Options

ALK (Standard Alarm Kit)	**SNB** (Include # of Sex Bolts)	**GBK** (Include GBK)	**CYL** (Include Cylinder)
SEC (Include Security Screws)	**AX** (Accessible Device)	**RX** (Request to Exit)	**LX** (Latchbolt Monitoring)

Rods For Surface Vertical Devices only

LBR (Less Bottom Rod)	**LBRAFL** (LBR with Aux. Fire Pin)

Strike Finish

US10B (Satin Bronze-Oil Rubbed)	**US19** (Flat Black)	**US26D** (Satin Chrome)	**US32D** (Satin Stainless)
SP313 (Dark Bronze)	**MD** (e-Moly)		

Trim Options

LT (Less Trim)	**210** (Standard DT/NL/K Trim)	**230** (Standard L/TP Trim)
110WD-NL / 110MD-NL (Night Latch Cyl-WD door/MD door)		

Trim Finish

US10B (Satin Bronze-Oil Rubbed)	**US26D** (Satin Chrome)	**US28** (Powder Coat Aluminum)	**313** (Duranodic Dark Bronze)

Misc

Prices subject to change without notice.

Indicates products that have EPD documentation available and meet LEED v4.

CE (CE Labeled)	**CON** (Connectors)		

Door Material			
AL (Aluminum Door)	**HM** (Hollow Metal)	**WD** (Wood Door)	**CP** (Composite Door)

Door Thickness		
1.3/4 (1-3/4" Standard)	**2** (2" Thickness)	**2.1/4** (2-1/4" Thickness)

Door Application		
D (Double Egress)	**P** (Pair of Doors)	**S** (Single Door)

Prices subject to change without notice.

Indicates products that have EPD documentation available and meet LEED v4.

3' Devices are priced complete with standard trim and strike(s), 4' add $11 list.
Cylinders and sex bolts are not included in price unless noted.

EXIT HARDWARE
Rim Devices

(Price includes 299 Strike)

	SP28 SP313	Weight lbs. 3'	Weight lbs. 4'	Standard Trim
22EO	467	11	14	–
22DT	520	12	16	210DT
22NL	528	12	16	210NL
22NL-OP	596	12	15	110MD/WD
22K (includes cylinder)	706	13	16	210K
22K-BE	706	13	16	210K-BE
22L	702	14	17	230L
22L-BE	702	14	17	230L-BE
22TP	701	14	16	230TP
22TP-BE	701	14	16	230TP-BE

FIRE EXIT HARDWARE
Rim Devices

(Price includes 299F Strike for single door applications.)
(For double door applications the 499F Strike will be supplied at an additional **$96 list add**).

22EO-F	580	12	14	–
22DT-F	633	12	15	210DT
22NL-F	641	12	15	210NL
22NL-OP-F	709	13	15	110MD/WD
22K-F (includes cylinder)	819	13	16	210K
22K-BE-F	819	13	16	210K-BE
22L-F	815	14	17	230L
22L-BE-F	815	14	17	230L-BE
22TP-F	814	13	17	230TP
22TP-BE-F	814	13	17	230TP-BE

EXIT HARDWARE
Surface Vertical Rod Devices

(Price includes 299, 248L-4, 304L Strikes and Sex Bolts for Latches)

2227EO	809	16	17	–
2227DT	862	17	19	210DT
2227NL	870	16	19	210NL
2227NL-OP	938	17	18	110MD/WD
2227K (includes cylinder)	1048	16	21	210K
2227K-BE	1048	16	21	210K-BE
2227L	1044	16	21	230L
2227L-BE	1044	16	21	230L-BE
2227TP	1043	18	21	230TP
2227TP-BE	1043	18	21	230TP-BE

FIRE EXIT HARDWARE
Surface Vertical Rod Devices

(Price includes 299F, 304L Strikes and Sex Bolts for Latches)

2227EO-F	1034	15	17	–
2227DT-F	1087	17	18	210DT
2227NL-F	1095	17	18	210NL
2227NL-OP-F	1163	16	18	110MD/WD
2227K-F (includes cylinder)	1273	16	20	210K
2227K-BE-F	1273	16	20	210K-BE
2227L-F	1269	16	21	230L
2227L-BE-F	1269	16	21	230L-BE
2227TP-F	1268	18	21	230TP
2227TP-BE-F	1268	18	21	230TP-BE

Prices subject to change without notice. Indicates products that have EPD documentation available and meet LEED v4.

Dogging Not for use with Fire Exit Hardware

Prefix		List Add
LD	Less Dogging for 22 Series Panic devices	N/C

Less Bottom Rod

Suffix		
LBR	Available with UL Fire Label at no additional charge on 2227-F Devices. LBR Devices must be ordered in pairs of Vertical Rod Devices.	N/C

Accessible Device

Prefix		List Add
AX	Accessible device compliant with the California Building Code (Section 11B-309.4) requirement for 5 lb. maximum operational force. Available on AX22, AX22-F Rim, AX2227-LBR, AX2227-LBR-F. Trim functions available EO, DT, NL, L, and LBE.	24

Exit Alarm

Prefix		List Add
ALK	Exit Alarm available on 22 series Panic and Fire Devices. Price includes switch - "RX" switch, "LX" is optional at no additional charge. For vertical rod tampering monitoring on Surface Vertical Devices, specify device with LX (Latch Bolt Monitor Switch). To order Less Switch, **Deduct $249** list. 9 volt battery included.	548

Switches (available on all 22 Series Devices)

Prefix		List Add
RX	Request to Exit	249
WP-RX	Waterproof Request to Exit	358
RX-LC	Request to Exit Low Current	288
RX-2	Request to Exit Double Switch	309
LX	Latchbolt Monitoring	249
LX-LC	Latchbolt Monitoring Low Current	288
LX-RX	Request to Exit / Latchbolt Monitoring combination	376
LX-RX-LC	Request to Exit / Latchbolt Monitoring combination Low Current	450

Connectors

Suffix		List Add
CON	Cross-category solution using interconnect components for electrified options. Available with ALK, LX, LXLC, LXRX, LXRXLC, RX and RXLC switches.	N/C

Prices subject to change without notice. Indicates products that have EPD documentation available and meet LEED v4.

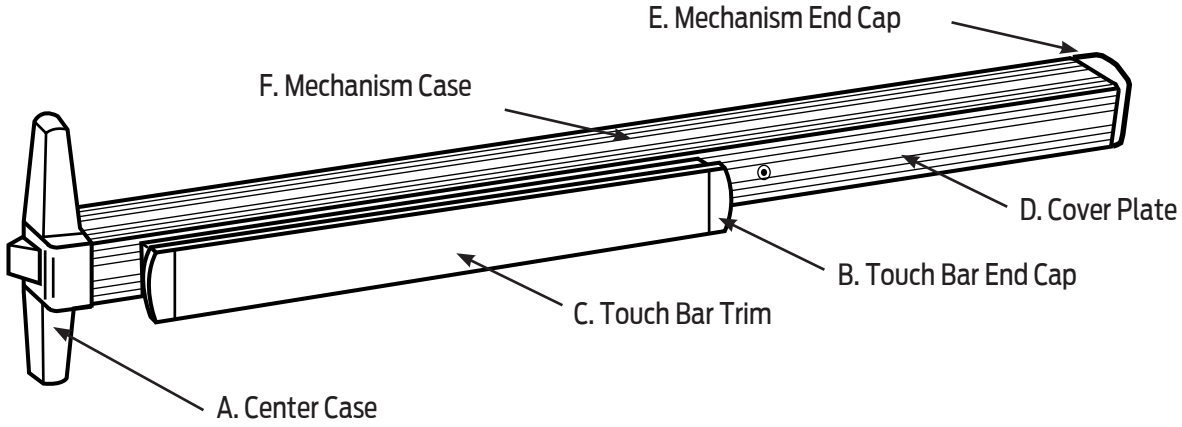

Standard Finishes

Color	US Number	BHMA Number	A, B, E	C -Touch Bar Trim Finishes	D, F
Bright Brass	US3	605	(A) Buffed Anodized (Dull) (B, E) Bright Brass	Bright Brass US3, 605	Buffed Anodized
Satin Brass	US4	606	(A) Anodized (B,E) Bright Brass	Satin Brass US4, 606	Anodized
Satin Bronze	US10	612	Plated/Anodized	Satin Bronze US10, 725	Anodized
Satin Bronze, Oil-Rubbed	US10B	613	(A) Powder Coat (B, E) Oil-Rubbed	Oil Rubbed, US10B	Powder Coat
Satin Nickel	US15	619	Plated, Clear Powder Coat	Satin Stainless Steel US32D, 630	Anodized
Polished Chrome	US26	625	Plated	Bright Stainless Steel US32, 629	Buffed Anodized
Satin Chrome	US26D	626	Plated	Satin Stainless Steel US32D, 630	Anodized
Satin Chrome, Antimicrobial	US26D-AM	626AM	AM Clear over Chrome	AM Clear over Satin Stainless Steel US32D, 630	AM Clear over Anodized
Anodized Aluminum	US28	628	(A, B) Anodized (E) Plated	Satin Stainless Steel US32D, 630	Anodized
Duranodic Dark Bronze	313	710	Powder Coat	Powder Coat 313, 710	Powder Coat
Black	315	711	Powder Coat	Powder Coat 315, 711	Powder Coat
Aged Bronze, 643E	--	--	(A) Aged Bronze, No Relief (B, E) Relieved Aged Bronze	Relieved Aged Bronze	Aged Bronze No Relief

US15 available on 35A only

Special Finishes

Color	US Number	BHMA Number	A, B, E	C -Touch Bar Trim Finishes	D, F
Bright Bronze	US9	611	Plated	Bright Bronze US9, 611	Buffed Anodized
Powder Coat	RAL # *	--	Powder Coat	Powder Coat	Powder Coat

*** See Finish page for optional RAL color information.**

33A/35A Series Sex Bolt Quantities

Application	425 Sex Bolts (Supplied)	For Latches 325 Sex Bolts (Supplied)
EO (exit only device)	2	4
DT device with 550 trim	2	4
NLOP device with 388 trim	2	4
3327A or 3347A TLOP with 374T trim	2	2

Prices subject to change without notice.

Indicates products that have EPD documentation available and meet LEED v4.

33A/35A Series • Summary

EXIT HARDWARE

Type of Device 33A (Grooved) 35A (Smooth)

None (Rim)	**27A** (Surface Vertical Rod)	**47A** / **48A** (Concealed Vertical Rod)	**49A** (Concealed Vertical Cable)
50WDC(Wood Door Concealed Vertical Cable)			

Function

EO (Exit Only)	**DT** (Dummy Trim)	**L** (Lever-06 Standard)	**LDT** (Lever-Dummy Trim)
NL (Night Latch-Key Retracts)	**NLOP** (Night Latch, Opt. Pull)	**TLOP** (Turn Lever, Opt. Pull)	**TL** (Turn Lever)
LBE (Lever-Blank Escutcheon)	**TLBE** (Turn Lever - Blank Escutcheon)	**T** (Thumbturn)	**TBE** (Thumbturn - Blank Escutcheon)

Rating

None (Panic Exit Device)	**- F** (Fire Exit Device)

Device Finish

US3 (Bright Brass)	**US4** (Satin Brass)	**US10** (Satin Bronze)	**US10B** (Satin Bronze-Oil Rubbed)
US26 (Bright Chrome)	**US26D** (Satin Chrome)	**US28** (Anodized Aluminum)	**313** (Duranodic Dark Bronze)
315 (Black)	**US26D**-AM (Antimicrobial)	**US15** (Satin Nickel - 35 series only)	

Device Length (Feet and Inches)

2' (2' Device for 2' Door - Vertical Device only)	**3'** (3' Device for 2' 4" - 3' Door)	**4'** (4' Device for 2' 10" - 4' Door)

Device Handing

RHR (Right Hand Reverse)	**LHR** (Left Hand Reverse)

Touch Bar Trim Options

RSS (Emergency Exit- US32D only)	**PUSH** (Embossed - Push)	**SG** (Safety Glow)	**KN** (Knurled)	**BRAILLE** (Braille)
WH (Drainage/Weep holes in Mechanism Case - 3' device will have 5 holes - 6" spacing, 4' device will have 7 holes - 6" spacing)				

Touch Bar Finish

US3 (Bright Brass)	**US4** (Satin Brass)	**US10** (Satin Bronze)	**US10B** (Satin Bronze-Oil Rubbed)
US32 (Bright Stainless)	**US32D** (Satin Stainless)	**313** (Duranodic Dark Bronze)	**315** (Black)
340 (Photoluminescent)			

Dogging Options

CD (Cylinder Dogging - Panic Only)	**HD** (Hex Dogging)	**LD** (Less Dogging)
CDSI (Cylinder Dogging w/Indicator)	**HDSI** (Hex Dogging w/ Indicator)	

Switch Options

LX (Latchbolt Monitoring)	**LXLC** (LBM Low Current)	**RX** (Request to Exit)	**RXLC** (Request to Exit Low Current)
RX2 (Request to Exit Double Switch)	**LXRX** (LBM Request to Exit)	**LXRXLC** (LBM Request to Exit Low Current)	
WP-RX (Waterproof Request to Exit)			

Prices subject to change without notice.

Indicates products that have EPD documentation available and meet LEED v4.

Electric Options

CX (Chexit - Controlled Exit)	**CX-RCM** (Remote Chexit Module)	**ES** (Pullman Latch for Electric Strike)
FS (Fail Safe)	**FSE** (Fail Secure)	**QEL** (Quiet Electric Latch Retraction)
SS (Signal Switch)	**EL** (Electric Latch Retraction)	

Device Options

HH (Hurricane)	**CYL** (Include Cylinder)	**PL** (Include Pullman Latch)	**GBK** (Include GBK)
ALK (Standard Alarm Kit)	**SEC** (Include Security Screws)	**AX** (Accessible Device)	**PN** (Pneumatic Latch Retraction)

Rods For Surface / Concealed Vertical Devices only

OPR (1 piece Top Rod)	**LBR** (Less Bottom Rod)	**LBRAFL** (LBR with Aux. Fire Pin)

Strike Series

LS (Less Strike)	**LTS** (Less Top Strike)	**1439** (Std. Rim)	**249** (Std. CVC)
260U (Opt. SV Flush Transom)	**260UF** (Opt. SV Fire Flush Transom)	**264** (Opt. Rim or SV)	**266** (Std. SV)
283 (Opt. CV - Wood Frame)	**299, 1410, 1606, 1609** (Opt. Rim)	**299F** (Std. SV Fire)	**338** (Std. CV)
499F (Std. SV Fire LBR)	**150** (Std. CVC-WDC)	**1439F** (Opt. Rim Fire)	

Bottom Strike Series

LBS (Less Bottom Strike)	**248L-4** (Surface)	**304L** (Mortise)	**349** (Std. CVC)
385A (Adjustable Mortise)	**450** (Std. CVC-WDC)		

Strike Finish

US3 (Bright Brass)	**US4** (Satin Brass)	**US10** (Satin Bronze)	**US10B** (Satin Bronze-Oil Rubbed)
US19 (Flat Black)	**US26** (Bright Chrome)	**US26D** (Satin Chrome)	**US32** (Bright Stainless)
US32D (Satin Stainless)	**MD** (e-Moly)	**SP313** (Dark Bronze)	**SP10** (Satin Bronze)

Trim Options

LT (Less Trim)	**386** (Standard DT / NL Trim)	**550** (Opt. Offset Dummy Trim)	**392-6** (Opt. Wire Pull Dummy Trim) **388** (Night Latch Cylinder Trim)

Trim/ControlFinish

US3 (Bright Brass)	**US4** (Satin Brass)	**US10** (Satin Bronze)	**US10B** (Satin Bronze-Oil Rubbed)
US26 (Bright Chrome)	**US26D** (Satin Chrome)	**SPBLK** (Black Painted)	**US26D-AM** (Antimicrobial)

Control Options

LC (Less Control)	**360** (Lever Control)	**E360** (360 Elec. Unlocking)	**360T** (Thumbturn Control - Rim)
E360T (360T Elec. Unlocking)	**374T** (Thumbturn Control - SV)	**376T** (Thumbturn Control - CV)	**376T** WDC (376T for Wood Door)
E374T (374T Elec. Unlocking)	**E376T** (376T Elec. Unlocking)	**E376T-WDC** (376T-WDC Elec. Unlocking)	

Prices subject to change without notice.

Indicates products that have EPD documentation available and meet LEED v4.

Control Lever Styles 06 Lever Standard

ACC (Accent Lever)	**AST** (Asti Lever)	**MER** (Merona Lever)
03K (03 Knurled Lever)	**06K** (06 Knurled Lever)	**01, 02, 03, 05, 06, 07, 12, 16, 17, 18** (Levers)
LAT (Latitude)	**LON** (Longitude)	**03 SS, 06 SS, 17 SS, LAT SS, LON SS, M57, M62** (Stainless Steel Levers)
M51, M52, M53, M54, M55, M56, M61, M63, M81, M82, M83, M84, M85, ME1, ME2, ME3		

Electric / Monitor Strike

OTH (Other Mfg Strike)	**4263T1** (Rim Monitor Strike)	**4268T1** (Rim Monitor Strike)	**4690T2** (For 33/3547A-F)
4690-1T2 (for 33/3547A Non - Fire)	**6111** (Rim W/Mull 33/3527A LBR)	**6112** (33/35A Rim single door)	**6113** (33/35A Rim single door)
6114 (33/35A Rim NL function)	**6121** (33/35A Rim Double Door no Mullion)		**6213** (Used with 33/3547A LBR)

CHEXIT Options

B15 (BOCA 15 Second Delay)	**0** (0 Second Delay)	**15** (15 Second Delay)
30 (Second Delay)	**M15** (15 Second Mute Delay)	**INF** (Infinite Delay)

Misc

CE (CE Labeled) **CON** (Connectors)	**LCP** (Less Cover Plate) **50WDC** (50WDC Cover Plate)	**10WDA** (#10WDA Cover Plate)	**33A** (33A-WDA Cover Plate)

Door Material

AL (Aluminum Door)	**HM** (Hollow Metal)	**WD** (Wood Door)	**CP** (Composite Door)
INS2 (Insulclad - 1/2")	**INS4** (Insulclad - 1/4")		

Door Thickness

1.3/4 (1-3/4" Standard)	**2** (2" Thickness)	**2.1/4** (2-1/4" Thickness)

Door Application

D (Double Egress)	**P** (Pair of Doors)	**S** (Single Door)

Mullion Application

1654 (HM, used w/ 2 - 1606 Strikes)	**4754** (HM, used w/ 2 - 4263 Monitor Strikes)	**5654** (AL, used w/ 2 - 299 Strikes)
4954 (HM, used w/2 - 299/264 Strikes)	**4854** (HM, used with a 299 & 6111ES)	**5754** (AL, 1408 Strike Installed)

APPLICATION NOTE FOR 2' DEVICE :

Available on Surface and Concealed Vertical (panic and fire).

When vertical rod devices are used on both doors of a pair, operation of the inactive door (smaller door) will not disengage the active door, creating a potential safety issue for those using the inactive door during an emergency. In addition, standard hex or cylinder dogging is not available. Dogging is not available for this application on 33/3527A/47/49A/50A-WDC devices.

For pairs of doors using one 2' door Von Duprin recommends the following hardware combinations listed below for optimum safety in an emergency.

1. Surface or Concealed Vertical device on the 2' door (inactive) and a mortise device on the larger door (active). This combination is used primarily on Hollow Metal door applications only.
2. Automatic Flush Bolt on the 2' door (inactive) and a Surface or Concealed Vertical device on the larger door (active).

NOTE: The 2' door width is not available with any Electrical, Chexit, Hurricane or Windstorm options.

Prices subject to change without notice. Indicates products that have EPD documentation available and meet LEED v4.

3' Devices are priced complete with standard trim, strike(s) and sex bolts.4' add $18 list. Cylinders are not included in price.

EXIT HARDWARE
Rim Devices

(Price includes 1439 Strike for ALF applications).
(For HMF and WDF applications the 299 strike is supplied at $86 list deduct).

	US26D	US28	313	US10	US4/4A	US3/3A US15 US26 643E	315	US10B	Weight lbs. 3'	Weight lbs. 4'	Standard Trim/Control
33A/35A-EO	1723	1395	1399	1446	1446	1805	2170	1700	12	14	–
33A/35A-DT	2071	1743	1747	1935	1794	2217	2518	2048	15	18	386DT
33A/35A-NL	2338	2010	2014	2205	2061	2531	2785	2315	16	18	386NL*
33A/35A-NL-OP	2025	1697	1701	1886	1728	2107	2472	2002	15	16	388
33A/35A-L	2429	2101	2105	2188	2058	2570	2876	2406	17	19	360L**
33A/35A-L-BE	2394	2066	2070	2160	2010	2528	2841	2371	17	19	360L-BE**
33A/35A-L-DT	2374	2046	2050	2134	2000	2511	2821	2351	17	19	360L-DT**
33A/35A-TL	2455	2127	2131	2219	2075	2597	2902	2432	17	19	360T**
33A/35A-TL-BE	2419	2091	2095	2188	2036	2557	2866	2396	17	19	360T-BE**
33A/35A-T	2455	2127	2131	2219	2075	2597	2902	2432	17	19	360T**
33A/35A-T-BE	2419	2091	2095	2188	2036	2557	2866	2396	17	19	360T-BE**

FIRE EXIT HARDWARE
Rim Devices

(Price includes 299F Strike for single door applications only.)
(For double door applications the 499F Strike will be supplied at an additional **$105 list add**).

33A/35A-EO-F	1823	1495	1499	1546	1546	1905	2270	1800	12	14	–
33A/35A-DT-F	2171	1843	1847	2035	1894	2317	2618	2148	16	18	386DT
33A/35A-NL-F	2438	2110	2114	2305	2161	2631	2885	2415	16	18	386NL*
33A/35A-NL-OP-F	2125	1797	1801	1986	1828	2207	2572	2102	15	16	388
33A/35A-L-F	2529	2201	2205	2288	2158	2670	2976	2506	17	19	360L**
33A/35A-L-BE-F	2494	2166	2170	2260	2110	2628	2941	2471	17	19	360L-BE**
33A/35A-TL-F	2555	2227	2231	2319	2175	2697	3002	2532	17	19	360T**
33A/35A-TL-BE-F	2519	2191	2195	2288	2136	2657	2966	2496	17	19	360T-BE**
33A/35A-T-F	2555	2227	2231	2319	2175	2697	3002	2532	17	19	360T**
33A/35A-T-BE-F	2519	2191	2195	2288	2136	2657	2966	2496	17	19	360T-BE**

33A/35A Rim Notes:

* **Handing** - the 386NL series trim is handed and not field reversible. Please specify handing, RHR or LHR.
** **Wood Door**s - 33A-WDA cover plate is required for the 360 series control and will be supplied at an additional, **$52 list add**.
Finish - US3A, US4A, consult factory for lead time.
Finish - US15 finish available on series 35A only.
Finish - US10B finish has 313 finish device with US10B parts.

Prices subject to change without notice.

Indicates products that have EPD documentation available and meet LEED v4.

3' Devices are priced complete with standard trim, strike(s) and sex bolts.
2' add $75 list , 4' add $18 list.
Cylinders are not included in price.

EXIT HARDWARE
Surface Vertical Rod Devices
(Price includes 266, 248L-4 and 304L Strikes)

	US26D	US28	313	US10	US4/4A	US3/3A US15 US26 643E	315	US10B	Weight lbs. 2'	3'	4'	Standard Trim/Control
33A/3527A-EO	2387	2039	2095	2116	2105	2481	2977	2542	13	16	19	–
33A/3527A-DT	2735	2387	2443	2605	2453	2893	3325	2890	16	19	22	386DT
33A/3527A-NL	3002	2654	2710	2875	2720	3207	3592	3157	17	20	23	386NL*
33A/3527A-NL-OP	2689	2341	2397	2556	2387	2783	3279	2844	17	19	21	388
33A/3527A-L	3093	2745	2801	2858	2717	3246	3683	3248	16	19	22	360L**
33A/3527A-L-BE	3058	2710	2766	2830	2669	3204	3648	3213	16	19	22	360L-BE**
33A/3527A-L-DT	3038	2690	2746	2804	2659	3187	3628	3193	16	19	22	360L-DT**
33A/3527A-TL	3467	3119	3175	3378	3082	3685	4057	3622	19	22	25	386DT/374T**
33A/3527A-TL-BE	3431	3083	3139	3347	3043	3645	4021	3586	19	22	25	386DT/374T-BE**
33A/3527A-T	3119	2771	2827	2889	2734	3273	3709	3274	19	22	25	360T**
33A/3527A-T-BE	3083	2735	2791	2858	2695	3233	3673	3238	19	22	25	360T-BE**

FIRE EXIT HARDWARE
Surface Vertical Rod Devices
(Price includes 299F and 304L Strikes)

33A/3527A-EO-F	2465	2086	2149	2172	2157	2568	3027	2633	13	16	19	–
33A/3527A-DT-F	2813	2434	2497	2661	2505	2980	3375	2981	17	20	23	386DT
33A/3527A-NL-F	3080	2701	2764	2931	2772	3294	3642	3248	17	20	23	386NL*
33A/3527A-NL-OP-F	2767	2388	2451	2612	2439	2870	3329	2935	13	16	19	388
33A/3527A-L-F	3171	2792	2855	2914	2769	3333	3733	3339	16	19	22	360L**
33A/3527A-L-BE-F	3136	2757	2820	2886	2721	3291	3698	3304	16	19	22	360L-BE**
33A/3527A-TL-F	3545	3166	3229	3434	3134	3772	4107	3713	18	22	25	386DT/374T**
33A/3527A-TL-BE-F	3509	3130	3193	3403	3095	3732	4071	3677	18	22	25	386DT/374T-BE**
33A/3527A-T-F	3197	2818	2881	2945	2786	3360	3759	3365	18	22	25	360T**
33A/3527A-T-BE-F	3161	2782	2845	2914	2747	3320	3723	3329	18	22	25	360T-BE**

33A/3527A Notes:

* **Handing** - the 386NL series trim is handed and not field reversible. Please specify handing, RHR or LHR.
** **Wood Doors** - 33A-WDA cover plate is required for the 360 series control and 10WDA for 370 series controls and will be supplied at an additional, **$52 list add**.
Finish - US3A, US4A, consult factory for lead time.
Finish - US15 finish available on series 35A only.
Finish - US10B finish has 313 finish device with US10B parts.

Prices subject to change without notice. Indicates products that have EPD documentation available and meet LEED v4.

3' Devices are priced complete with standard trim, strike(s) and sex bolts.
2' add $75 list, 4' add $18 list.
Cylinders are not included in price.

EXIT HARDWARE

Concealed Vertical Rod Devices

(Price includes 338 and 385A Strikes)

	US26D	US28	313	US10	US4/4A	US3/3A US15 US26 643E	315	US10B	Weight lbs. 2'	3'	4'	Standard Trim/ Control
33A/3547A-EO	2449	2054	2099	2147	2147	2537	2984	2557	12	16	18	–
33A/3547A-DT	2797	2402	2447	2636	2495	2949	3332	2905	16	19	22	386DT
33A/3547A-NL	3064	2669	2714	2906	2762	3263	3599	3172	18	20	22	386NL*
33A/3547A-NL-OP	2751	2356	2401	2587	2429	2839	3286	2859	17	19	21	388
33A/3547A-L	3155	2760	2805	2889	2759	3302	3690	3263	16	19	22	360L**
33A/3547A-L-BE	3120	2725	2770	2861	2711	3260	3655	3228	16	19	22	360L-BE**
33A/3547A-L-DT	3100	2705	2750	2835	2701	3243	3635	3208	16	19	22	360L-DT**
33A/3547A-TL	3529	3134	3179	3409	3124	3741	4064	3637	20	22	24	386DT/376T**
33A/3547A-TL-BE	3493	3098	3143	3378	3085	3701	4028	3601	20	22	24	386DT/376T-BE**
33A/3547A-T	3181	2786	2831	2920	2776	3329	3716	3289	20	22	24	360T**
33A/3547A-T-BE	3145	2750	2795	2889	2737	3289	3680	3253	20	22	24	360T-BE**

FIRE EXIT HARDWARE

Concealed Vertical Rod Devices

(Price includes 338 and 385A Strikes)

33A/3547A-EO-F	2555	2182	2216	2286	2286	2647	3101	2703	14	16	18	–
33A/3547A-DT-F	2903	2530	2564	2775	2634	3059	3449	3051	18	20	22	386DT
33A/3547A-NL-F	3170	2797	2831	3045	2901	3373	3716	3318	18	20	22	386NL*
33A/3547A-NL-OP-F	2857	2484	2518	2726	2568	2949	3403	3005	14	16	18	388
33A/3547A-L-F	3261	2888	2922	3028	2898	3412	3807	3409	16	19	22	360L**
33A/3547A-L-BE-F	3226	2853	2887	3000	2850	3370	3772	3374	16	19	22	360L-BE**
33A/3547A-TL-F	3635	3262	3296	3548	3263	3851	4181	3783	20	22	24	386DT/376T**
33A/3547A-TL-BE-F	3599	3226	3260	3517	3224	3811	4145	3747	20	22	24	386DT/376T-BE**
33A/3547A-T-F	3287	2914	2948	3059	2915	3439	3833	3435	20	22	24	360T**
33A/3547A-T-BE-F	3251	2878	2912	3028	2876	3399	3797	3399	20	22	24	360T-BE**

33A/3547A Notes:

* **Handing** - the 386NL series trim is handed and not field reversible. Please specify handing, RHR or LHR.
** **Wood Doors** - 33A-WDA cover plate is required for the 360 series control and 10WDA for 370 series controls and will be supplied at an additional, **$52 list add**.
Finish - US3A, US4A, consult factory for lead time.
Finish - US15 finish available on series 35A only.
Finish - US10B finish has 313 finish device with US10B parts.

Prices subject to change without notice.

Indicates products that have EPD documentation available and meet LEED v4.

3' Devices are priced complete with standard trim, strike(s) and sex bolts.
2' add $75 list, 4' add $18 list.
Cylinders are not included in price.

EXIT HARDWARE
Concealed Vertical Rod Devices

(Price includes 338 and 385A Strikes)
For Hollow Metal doors

	US26D	US28	313	US10	US4/4A	US3/3A US15 US26 643E	315	US10B	Weight lbs. 2'	3'	4'	Standard Trim/Control
33A/3548A-EO	2737	2343	2386	2435	2435	2826	3273	2844	14	16	18	–
33A/3548A-DT	3085	2691	2734	2924	2783	3238	3621	3192	16	19	22	386DT
33A/3548A-NL	3352	2958	3001	3194	3050	3552	3888	3459	18	20	22	386NL*
33A/3548A-NL-OP	3039	2645	2688	2875	2717	3128	3575	3146	17	19	21	388
33A/3548A-L	3443	3049	3092	3177	3047	3591	3979	3550	16	19	22	360L
33A/3548A-L-BE	3408	3014	3057	3149	2999	3549	3944	3515	16	19	22	360L-BE
33A/3548A-L-DT	3388	2994	3037	3123	2989	3532	3924	3495	16	19	22	360L-DT
33A/3548A-TL	3817	3423	3466	3697	3412	4030	4353	3924	20	22	24	386DT/376T
33A/3548A-TL-BE	3781	3387	3430	3666	3373	3990	4317	3888	20	22	24	386DT/376T-BE
33A/3548A-T	3469	3075	3118	3208	3064	3618	4005	3576	20	22	24	360T
33A/3548A-T-BE	3433	3039	3082	3177	3025	3578	3969	3540	20	22	24	360T-BE

FIRE EXIT HARDWARE
Concealed Vertical Rod Devices

(Price includes 338 and 385A Strikes)
For Hollow Metal doors

33A/3548A-EO-F	2842	2469	2504	2575	2575	2934	3389	2992	14	16	18	–
33A/3548A-DT-F	3190	2817	2852	3064	2923	3346	3737	3340	18	20	22	386DT
33A/3548A-NL-F	3457	3084	3119	3334	3190	3660	4004	3607	18	20	22	386NL*
33A/3548A-NL-OP-F	3144	2771	2806	3015	2857	3236	3691	3294	14	16	18	388
33A/3548A-L-F	3548	3175	3210	3317	3187	3699	4095	3698	16	19	22	360L
33A/3548A-L-BE-F	3513	3140	3175	3289	3139	3657	4060	3663	16	19	22	360L-BE
33A/3548A-TL-F	3922	3549	3584	3837	3552	4138	4469	4072	20	22	24	386DT/376T
33A/3548A-TL-BE-F	3886	3513	3548	3806	3513	4098	4433	4036	20	22	24	386DT/376T-BE
33A/3548A-T-F	3574	3201	3236	3348	3204	3726	4121	3724	20	22	24	360T-BE
33A/3548A-T-BE-F	3538	3165	3200	3317	3165	3686	4085	3688	20	22	24	360T-BE

33A/3548A Notes:

* **Handing** - the 386NL series trim is handed and not field reversible. Please specify handing, RHR or LHR.
Finish - US3A, US4A, consult factory for lead time.
Finish - US15 finish available on series 35A only.
Finish - US10B finish has 313 finish device with US10B parts.

Prices subject to change without notice.

Indicates products that have EPD documentation available and meet LEED v4.

3' Devices are priced complete with standard trim, strike(s) and sex bolts where shown.
2' add $75 list, 4' add $18 list.
Cylinders are not included in price.

For Concealed Vertical Cable Devices prices shown are for Door Opening Heights 6'0" -10'0"

EXIT HARDWARE

Concealed Vertical Cable Devices

(Price includes 249 and 349 Strikes)
For Hollow Metal doors

	US26D	US28	313	US10	US4/4A	US3/3A US15 US26 643E	315	US10B	Weight lbs. 2'	3'	4'	Standard Trim/Control
33A/3549A-EO	2465	2068	2101	2162	2162	2554	3003	2589	12	16	18	–
33A/3549A-DT	2813	2416	2449	2651	2510	2966	3351	2937	16	19	22	386DT
33A/3549A-NL	3080	2683	2716	2921	2777	3280	3618	3204	18	20	22	386NL*
33A/3549A-NL-OP	2767	2370	2403	2602	2444	2856	3305	2891	17	19	21	388
33A/3549A-L	3171	2774	2807	2904	2774	3319	3709	3295	16	19	22	360L
33A/3549A-L-BE	3136	2739	2772	2876	2726	3277	3674	3260	16	19	22	360L-BE
33A/3549A-L-DT	3116	2719	2752	2850	2716	3260	3654	3240	16	19	22	360L-DT
33A/3549A-T	3197	2800	2833	2935	2791	3346	3735	3321	20	22	24	360T
33A/3549A-T-BE	3161	2764	2797	2904	2752	3306	3699	3285	20	22	24	360T-BE

FIRE EXIT HARDWARE

Concealed Vertical Cable Devices

(Price includes 249 and 349 Strikes)
For Hollow Metal doors

33A/3549A-EO-F	2570	2173	2206	2267	2267	2659	3108	2694	14	16	18	–
33A/3549A-DT-F	2918	2521	2554	2756	2615	3071	3456	3042	18	20	22	386DT
33A/3549A-NL-F	3185	2788	2821	3026	2882	3385	3723	3309	18	20	22	386NL*
33A/3549A-NL-OP-F	2872	2475	2508	2707	2549	2961	3410	2996	14	16	18	388
33A/3549A-L-F	3276	2879	2912	3009	2879	3424	3814	3400	16	19	22	360L
33A/3549A-L-BE-F	3241	2844	2877	2981	2831	3382	3779	3365	16	19	22	360L-BE
33A/3549A-T-F	3302	2905	2938	3040	2896	3451	3840	3426	20	22	24	360T
33A/3549A-T-BE-F	3266	2869	2902	3009	2857	3411	3804	3390	20	22	24	360T-BE

33A/3549A Notes:

* **Handing** - The 386NL series trim is handed and not field reversible. Please specify handing, RHR or LHR.
Finish - US3A, US4A, consult factory for lead time.
Finish - US15 finish available on series 35A only.
Finish - US10B finish has 313 finish device with US10B parts.
Door Opening Height - Specify door opening height if other than the default.
For door opening heights more than 10', consult factory.

For Concealed Vertical Cable Devices - Less Cable System (LCS) Deduct $967 List

Nominal Door Opening Height		Top Cable	Bottom Cable
72"-82"	6' - 6'10'	47250398	47250403
*>82"-96"	*6'10' - 8'	47250175	47250178
>96" - 110"	>8' - 9'2"	47250176	47250179
>110" - 120"	>9'2" - 10'	47250177	47250180

*Default door opening height

Prices subject to change without notice.

Indicates products that have EPD documentation available and meet LEED v4.

3' Devices are priced complete with standard trim, strike(s) and sex bolts.
2' add $75 list, 4' add $18 list.
Cylinders are not included in price.

EXIT HARDWARE

Wood Door Concealed Vertical Cable Devices

(Price includes 150 and 450 Strikes, Sex Bolts, and Scalp Plate)

	US26D	US28	313	US10	US4/4A	US3/3A US15 US26 643E	315	US10B	Weight lbs. 2'	3'	4'	Standard Trim/Control
33A/3550A-WDC-EO	2442	2208	2375	2462	2542	2716	3076	2929	12	16	18	—
33A/3550A-WDC-DT	2790	2556	2723	2951	2890	3128	3424	3277	16	19	22	386DT
33A/3550A-WDC-NL	3057	2823	2990	3221	3157	3442	3691	3544	18	20	22	386NL*
33A/3550A-WDC-NL-OP	2744	2510	2677	2902	2824	3018	3378	3231	17	19	21	388
33A/3550A-WDC-L	3200	2966	3133	3256	3206	3533	3834	3687	16	19	22	360L/33A-WDA
33A/3550A-WDC-L-BE	3165	2931	3098	3228	3158	3491	3799	3652	16	19	22	360L-BE/33A-WDA
33A/3550A-WDC-L-DT	3145	2911	3078	3202	3148	3474	3779	3632	16	19	22	360L-DT/33A-WDA
33A/3550A-WDC-T	3226	2992	3159	3287	3223	3560	3860	3713	20	22	24	360T/33A-WDA
33A/3550A-WDC-T-BE	3190	2956	3123	3256	3184	3520	3824	3677	20	22	24	360T-BE/33A-WDA

For Devices Less Cable System (LCS) Deduct $1107 List

FIRE EXIT HARDWARE

Wood Door Concealed Vertical Cable Devices

(Price includes 150 and 450 Strikes, Sex Bolts, and Scalp Plate)

33A/3550A-WDC-EO-F	2742	2508	2675	2762	2842	3016	3376	3229	14	16	18	—
33A/3550A-WDC-DT-F	3090	2856	3023	3251	3190	3428	3724	3577	18	20	22	386DT
33A/3550A-WDC-NL-F	3357	3123	3290	3521	3457	3742	3991	3844	18	20	22	386NL*
33A/3550A-WDC-NL-OP-F	3044	2810	2977	3202	3124	3318	3678	3531	14	16	18	388
33A/3550A-WDC-L-F	3500	3266	3433	3556	3506	3833	4134	3987	16	19	22	360L/33A-WDA
33A/3550A-WDC-L-BE-F	3465	3231	3398	3528	3458	3791	4099	3952	16	19	22	360L-BE/33A-WDA
33A/3550A-WDC-T-F	3526	3292	3459	3587	3523	3860	4160	4013	20	22	24	360T/33A-WDA
33A/3550A-WDC-T-BE-F	3490	3256	3423	3556	3484	3820	4124	3977	20	22	24	360T-BE/33A-WDA

For Devices Less Cable System (LCS) Deduct $1407 List

33A/3550A-WDC Notes:

* **Handing** - the 386NL series trim is handed and not field reversible. Please specify handing, RHR or LHR.
Finish - US3A, US4A, consult factory for lead time.
Finish - US15 finish available on series 35A only.
Finish - US10B finish has 313 finish device with US10B parts.
Door Opening Height - must be specified when placing an order.
Other heights over 10' are available, consult factory for lead time.
Non-standard Center Lines or Threshold installed - consult customer support.

Standard Door Opening Height Range	Top Cable	Bottom Cable
6'8" - 7'0"	24648180	24647265
7'1" - 8'0"	24647273	24647265
8'1" - 9'0"	24647281	24647265
9'1" - 10'0"	24647299	24647265

Prices subject to change without notice.

Indicates products that have EPD documentation available and meet LEED v4.

Cylinder Dogging

(Not for use with Fire Exit Hardware)

Prefix		List Add
CD	Standard Baseplate Cylinder Dogging	97
LD	Less Dogging	N/C
CDSI	Cylinder Dogging w/ Indicator	319
HDSI	Hex Dogging w/ Indicator	230

Pneumatic Devices

Prefix			List Add
PN	Pneumatic		1414
Accessories		**Order Part Number**	**Each Price**
PNT-1	Pneumatic Power Transfer	012014-36	619
PN Connector	Pneumatic Connector	051827-00	38
PN Tubing	25' length	051828-00	25
	50' length	051823-00	33
	100' length	051824-00	56
	200' length	051825-00	106

Pushbar Options

Suffix		List Add
BRAILLE	Vision Impaired Touchpad, Raised Letters and Braille (US32D) **Specify handing, RHR or LHR.** Standard reads "Caution Stairwell." Optional up to 20 alpha / numeric characters on single line, consult factory.	125
PUSH	Brass, Bronze and Stainless Touchbar trims embossed "PUSH". **Specify handing, RHR or LHR.** No additional charge when specified with device.	NC
RSS	Red Silkscreened Touchbar trims (Standard on SS devices). "Emergency Exit Only, Push to Open and Sound Alarm" No additional charge when specified with device. **Specify handing, RHR or LHR**.	NC
KN	Knurled Touchpad No additional charge when specified with device.	NC
SG	Safety Glow feature - for 3' device	455
	Safety Glow feature - for 4' device	474

Weep Holes

Suffix		List Add
WH	Drainage (Weep) Holes in Mechanism Case 3' device will have 5 holes - 6" spacing, 4' device will have 7 holes	89

Hurricane Device

Prefix		List Add
HH	33/3547A-F Device with Standard Strikes	N/C

Door Thickness >2-1/4" - 4 1/4"

Suffix		List Add
Door Thickness > 2-1/4" - <= 4 1/4"	33A/35A with EO (exit only no trim)	89
	33A/35A with DT (386), NL (386) or NL-OP (388)	178
	33A/35A with L, L-BE (360)	219
	33A/35A with L-DT (360)	176

Von Duprin Remote Undogging and Remote Monitoring Kit

- Modular Retrofit Kit for 98/99 and 33A/35A Series Devices
- Access control managed via an IP or RSI/ RS-485 connection to the gateway through Allegion software alliance members.

** Please note, ENGAGE cloud based management not available.**

- Consult your access control software provider for pricing and specific scope of support.

For details regarding the configurations that are available, please see page 266 of the Schlage Electronics Price Book.

Prices subject to change without notice.

Indicates products that have EPD documentation available and meet LEED v4.

Insulclad or Applied Panel

(Not available for fire door applications)

Suffix		List Add
INS-2	1/2" Panel - for 33/3547A devices. Order part number 050399	67
INS-4	1/4" Panel - for 33/3547A devices. Order part number 050398	67
INS-2-KIT-33/3549A	1/2" Panel - for 33/3549A devices. Order part number 24122277	67
INS-4-KIT-33/3549A	1/4" Panel - for 33/3549A devices. Order part number 24122293	67

Electric Latch Retraction

See 33A/35A Product Catalog for required accessory equipment

Device Prefix	Description	List Add
EL	Electric Latch Retraction	921
HD-EL	Electric Latch Retraction with Hex Dogging (Panic Only)	921
QEL	Quiet Electric Latch Retraction	914
HD-QEL	Quiet Electric Latch Retraction with Hex Dogging (Panic Only)	914

EL Conversion Kits

(Field Conversion Kits for Electric Latch Retraction)

	Standard		Allegion Connect -CON		
	3' device	**4' device**	**3' device**	**4' device**	**List Price**
EL Baseplate Conversion Kit	050070	050078	050853	050854	1074
HD-EL Baseplate Conversion Kit (Hex Dogging included - Panic Only)	050384	050385	050855	050856	1074

QEL Conversion Kits

(Field Conversion Kits for Quiet Electric Latch Retraction)

Baseplate Conversion Kits (May be used for ANY conversion application)					
QEL Baseplate Conversion Kit	958003	040065	040063	040066	960
HD-QEL Baseplate Conversion Kit (Hex Dogging included - Panic Only)	958004	040067	040064	040068	960
Modular Conversion Kits (For Panic Devices, for Fire-rated Devices sold after October 2014, or for replacing existing motor)					
QEL Modular Conversion Kit	114317	114317	040061	040061	914
HD-QEL Modular Conversion Kit (Hex Dogging included - Panic Only)	958002	958002	040062	040062	914

Exit Alarm

Suffix		List Add
ALK	Exit Alarm available on 33A, 35A series Panic and Fire Devices. Price includes switch - "RX" switch, "LX" is optional at no additional charge. For vertical rod tampering monitoring on Surface Vertical Devices, specify device with LX (Latch Bolt Monitor Switch). To order Less Switch, **Deduct $249** list. 9 volt battery included.	617

Switches

(available on all 33A/35A Series Devices)

Prefix		List Add
RX	Request to Exit	249
WP-RX	Waterproof Request to Exit	358
RX-LC	Request to Exit Low Current	288
RX-2	Request to Exit Double Switch	309
RX-AUX	RX to RX-2 Conversion - Order part number 050271.	258
* **LX**	Latchbolt Monitoring	249
* **LX-LC**	Latchbolt Monitoring Low Current	288
* **LX-RX**	Request to Exit / Latchbolt Monitoring combination	376
* **LX-RX-LC**	Request to Exit / Latchbolt Monitoring combination Low Current	450
SS	Signal Switch - for Rim and Vertical Rod Devices	509

* For 33/3549A and 33/3550A-WDC, LX switch monitors trim input or electric dogging of EL/QEL devices. LX switch does not monitor latch condition.
See page 107 for field-installed switch kit part numbers.

Prices subject to change without notice. Indicates products that have EPD documentation available and meet LEED v4.

Pullman Latches

(Not for use with Fire Exit Hardware)

Prefix		List Add
PL	33A/3527A Device PL Top and PL Bottom	260
	33A/3547A Device PL Top and PL Bottom	362
ES	33A/3527A Device LBR with PL Top Latch for electric strike application.	130
	33A/3547A Device LBR with PL Top Latch for electric strike application.	181
	NOTE: A Panic LBR device is one point latching not two point. Security of the opening may be compromised.	

49 Cable System

(Device Type and Door Opening Height must be specified when ordering)

Prefix Suffix				List Price
CS		**Complete Cable System** Includes: Top and Bottom Strikes, Latches, Centerslides, Cables and Mounting Packs	Door Opening Heights - 6'0" to 10'0"	967
CS	**LBL**	**Cable System - Less Bottom Latch** Includes: Top Strike, Top Latch, Top Cable, Centerslides, Mounting Packs	Door Opening Heights - 6'0" to 10'0"	843
CS	**LBL - 49AFL**	**Cable System - Less Bottom Latch - with Fire Pin Kit** Includes: Top Strike, Top Latch, Top Cable, Centerslides, Mounting Packs and Fire Pin Kit	Door Opening Heights - 6'0" to 10'0"	994

For door opening heights less than 6'10" and more than 10', consult factory.
Consult customer support for non-standard center lines or if a threshold is installed.

50 WDC Cable System

(Device Type and Door Height must be specified when ordering)

Prefix	*Suffix*		List Price
CS		**Complete Cable System** Includes: Top and Bottom Latches, Strikes, Cables, Centerslide, Mounting Packs	1107
CS	**F**	**Fire-Rated Complete Cable System** Includes: Top and Bottom Latches, Strikes, Cables, Centerslide, Mounting Packs, Fire kit	1407
CS	**LBL**	**Cable System - Less Bottom Latch** Includes: Top Latch, Strike, Cable, Centerslide, Mounting Packs	983
CS	**LBL-F**	**Fire-Rated Cable System - Less Bottom Latch** Includes: Top Latch, Strike, Cable, Centerslide, Mounting Packs, Fire kit, Fire Pin kit	1434

Chexit

(available on all 33A/35A Series Devices)

Prefix			List Add
CX		**Chexit – Controlled Exit Device** (15 Second Delay furnished standard) Chexit 33A/35A devices are only available with functions EO, DT, L-DT, L-BE x E360, T-BE x E360T DT Function requires an electric strike to access opening. For CX33/3527A panic and fire devices, two Rod Guards (RGO) supplied standard. **Add $580 list** per device. For doors over 7' additional RGO's will be added as needed to protect the rods. For each additional RGO, **add $290 List**. For latch protection, latch guards (LGO) found on page 100 can be ordered separately.		1811
CX Options:		**RCM**	Remote Chexit Module	259
	*	**RCM KIT-33A**	Less Module - specify part number 040198-00 and finish.	259
	*	**RCM KIT-35A**	Less Module - specify part number 040199-00 and finish.	259
		0 Delay	0 Second Delay	133
	**	**30 Delay**	30 Second Delay	133
	√	**BOCA-15 Delay**	15 second delay with BOCA Modification	133
	√**	**BOCA-30 Delay**	30 second delay with BOCA Modification	133
	√**	**Other Delays**	2-60 Seconds in 2 Second Intervals or infinite delay	178

*** 15 second Module sold separately, specify part number 040086.**
****Over 15 second delay requires a letter of approval from the authority having local jurisdiction over the premises prior to the installation of the device. Allegion cannot grant such approval nor does it warrant local jurisdiction compliance.**
√ Consult factory for lead time.

Chexit is not available with any electrical options (EL, QEL, PN).
Chexit is not available with any switches (RX, RXLC, RX2, WP-RX, LX, LXLC, LXRX, LXRXLC)

Prices subject to change without notice.

Indicates products that have EPD documentation available and meet LEED v4.

Accessible Device

Prefix		List Add
AX	Accessible device compliant with the California Building Code (Section 11B-309.4) requirement for 5 lb. maximum operational force. Available on AX33/35A, AX33/35A-F Rim, AX33/3549A LBL and LBL-AFL. Trim functions available EO, DT, NL, L, LBE, LDT, T, and TBE. EL option available. Not available with QEL or CX.	62

Connectors

Suffix		List Add
CON	Cross-category solution using interconnect components for electrified options. Available with ALK, LX, LXLC, LXRX, LXRXLC, RX and RXLC switches, CX, EL and QEL	N/C

Electric Unlocking

Prefix		List Add
E	Electric Unlocking of outside Lever or Thumbturn Controls **(BE Trim Only)** 24VDC furnished standard. 12VDC available, consult factory for lead time. Specify Fail Secure (FSE) or Fail Safe (FS). Prefix Lever or Thumbturn Control with "E" Example: E360L-BE, E360T-BE E374TL-BE and E376TL-BE available, consult factory for lead time.	617

Less Bottom Rod/Less Bottom Latch

Suffix			List Add
LBR	Less bottom rod available with UL Fire Label at no additional charge on 33/3527A-F and 33/3547A-F LBR devices must be ordered in pairs of vertical rod devices.		N/C
			Deduct
	Less bottom rod, Panic 33/3527A		116
	Less bottom rod, Panic 33/3547A		124
			List Price
LBR-KIT	Fire Latch Kit, complete auxiliary bolt field replacement kit. Order part number 050171-32		459
			Deduct
LBL	Less bottom latch available on 33/3549A and 33/3550A-WDC (Panic)	**LBL Only**	124
	33/3549A-F LBL and 33/3550A-WDC-F LBL devices **must be ordered in pairs of vertical latch devices with one Fire Pin Kit per pair.**	**LBL Only**	
			Deduct
	First Leaf - 33/3549A-F LBL and 33/3550A-WDC-F LBL		124
			Add
	Second Leaf - 33/3549A-F LBL and 33/3550A-WDC-F LBL LBL Only with Fire Pin Kit		27
			List Price
49 Fire Pin Kit	49 Fire Pin Kit, complete auxiliary bolt field replacement kit. Order part number 051860-32		151

Anti-Microbial Finish

Suffix		List Add
AM	Antimicrobial Coating available in US26D and US32D, use suffix-AM when ordering. Example US26D-AM	
	For Device with or without Trim	68
	For Trim Only (US26D-AM)	32

Quiet Mechanical

Prefix		List Add
QM	Controls motion to reduce operational noise. The QM device option provides damper-controlled re-latching. Available on 33A/35A rim and 33/3527A devices. Compatible with most of the device options including QEL, EL, AX, RX, and CD. Not available with CX and LX.	185

Prices subject to change without notice. Indicates products that have EPD documentation available and meet LEED v4.

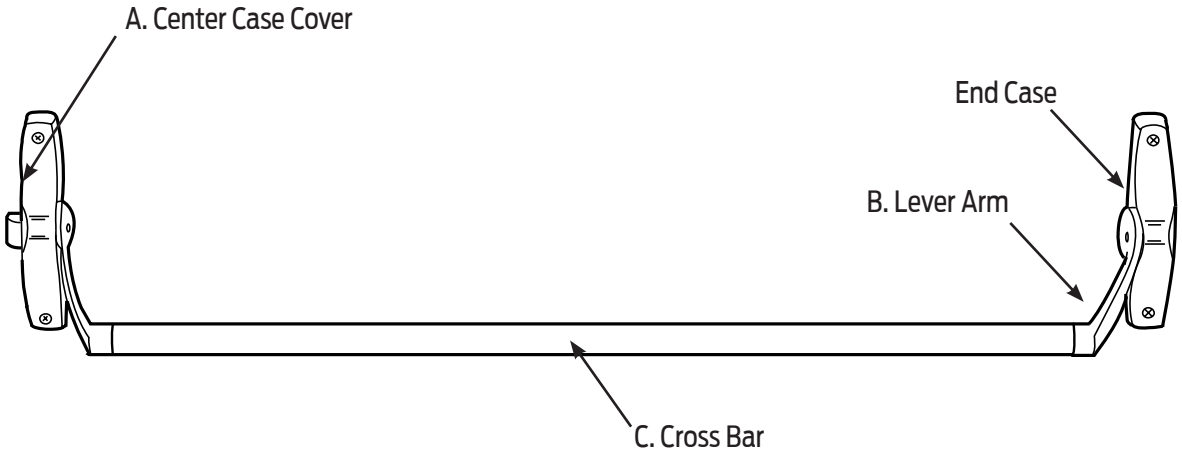

Standard Finishes

Color	US Number	BHMA Number	A, B	C
Bright Brass	US3	605	Buffed Brass, Clear Coat	Buffed Brass, Clear Coat
Satin Brass	US4	606	Satin Brass, Clear Coat	Satin Brass, Clear Coat
Satin Bronze	US10	612	Plated, Clear Coat	Plated, Clear Coat
Satin Bronze, Oil-Rubbed	US10B	613	Oil-Rubbed	Oil-Rubbed
Polished Chrome	US26	625	Plated	Bright Stainless Steel US32, 629
Satin Chrome	US26D	626	Plated	Satin Stainless Steel US32D, 630
Satin Chrome - Antimicrobial	US26D-AM	626-AM	AM Clear over Chrome	AM Clear over Stainless
Aged Bronze	643E	–	Aged Bronze, Relieved	Aged Bronze, no Relief

Special Finishes

Color	US Number	BHMA Number	A, B	C
Bright Brass - no Lacquer	US3A	–	Buffed Brass	Bright Brass US3A
Satin Brass - no Lacquer	US4A	–	Satin Brass	Satin Brass US4A
Painted Black	SPBLK	–	Painted	Painted Black, SPBLK

55 Series Sex Bolt Quantities

Application	625 Sex Bolts (Supplied)
55 and 5547WDC	4
5547 and 5575	2
5547 EO, DT, NL on Wood Door	4

Prices subject to change without notice.

55 Series • Summary

EXIT HARDWARE

Type of Device

None (Rim)	**5547** (Conc. Vertical)	**5547WDC** (Conc. Vert. WD)	**5575** (Mortise Lock, FS or FSE)

Function

EO (Exit Only)	**DT** (Dummy Trim)	**L** (Lever-06 Standard)	**LDT** (Lever-Dummy Trim)
NL (Night Latch-Key Retracts)	**NLOP** (Night Latch, Opt. Pull)	**TLOP** (Turn Lever, Opt. Pull)	**TL** (Turn Lever)
LBE (Lever-Blank Escutcheon)	**TLBE** (Turn Lever - Blank Escutcheon)		

Rating

None (Panic Exit Device)	**- F** (Fire Exit Device)

Device Finish

US3 (Bright Brass)	**US4** (Satin Brass)	**US10** (Satin Bronze)	**US26** (Bright Chrome)
US26D (Satin Chrome)	**US10B** (Satin Bronze-Oil Rubbed)	**SPBLK** (Black Painted)	

Device Handing

RHR (Right Hand Reverse)	**LHR** (Left Hand Reverse)

Cross Bar Options

RCB (Reinforced Crossbar)	**KN** (Knurled)

Switch Options

RX (Request to Exit)

Electric Options

E (Electric Locking- Mortise, FS or FSE)	**ES** (Pullman Latch for Electric Strike)

Device Options

CYL (Include Cylinder)	**SLM** (Include SLM Blocking)

Rods For Concealed Vertical Devices only

LBR (Less Bottom Rod)

Strike Series

LS (Less Strike)	**LTS** (Less Top Strike)	**1409** (Std. 55 Rim)	**472U** (Opt. 5547WDC 1-3/4)
473U (Opt. 5547WDC 2-1/4)	**264** (Opt. Rim or SV)	**471U** (Std. CV 5547)	**575** (Std. 5575 Mortise)
299, 1410, 1606, 1609 (Opt. Rim)	**575-2** (Opt. 5575 Mortise)	**338** (Std. CV 5547)	**576A** (Opt. 5575 1-3/4)
576B (Opt. 5575 2-1/4)			

Bottom Strike Series

LBS (Less Bottom Strike)	**301L** (Standard 5547-F)	**304L** (Standard 5547)	**385A** (Optional)

Prices subject to change without notice.

Strike and Mortise Finish

US3 (Bright Brass)	**US4** (Satin Brass)	**US10** (Satin Bronze)	**US10B** (Satin Bronze-Oil Rubbed)
US19 (Flat Black)	**MD** (e-Moly)	**SP313** (Dark Bronze)	**US32** (Bright Stainless)
US32D (Satin Stainless)	**US26** (Bright Chrome, N/A 5575)	**SP10** (Sprayed Bronze)	**US26D** (Satin Chrome, N/A 5575)
US9A (Pol. Bronze-no Lacquer)	**US10A** (Satin Bronze-no Lacquer)		

Trim Options

LT (Less Trim)	**550DT** (Dummy Trim)	**555NL** (Night Latch - HM)	**556NL** (Night Latch - WD)
555NL-CA (Night Latch w/Cyl-HM)	**LCA** (Less Cylinder Assy)	**609DT** (Dummy Trim)	**556NL-CA** (Night Latch w/Cyl-WD)
376L (std. 5547 Lever)	**376L-BE** (Lvr-Blank Escutcheon)	**376WDC-L** (5547 Lever)	**376WDC-LBE** (LBE for Wood Door)
379L (std. 55 Lever)	**379L-BE** (Lvr-Blank Escutcheon)	**110WD-NL** (Night Latch w/Cyl-WD)	**E376L-BE** (E-Trim)
110MD-NL (Night Latch w/Cyl-HM)			**E379L-BE** (E-Trim) **E376WDC-L-BE** (E-Trim)

Trim/Control Finish

US3 (Bright Brass)	**US4** (Satin Brass)	**US10** (Satin Bronze)	**US10B** (Satin Bronze-Oil Rubbed)
US9A (Pol. Bronze-no Lacquer)	**US26D** (Satin Chrome)	**US26** (Bright Chrome)	**US10A** (Satin Bronze-no Lacquer)

Control Options

LC (Less Control)	**371** (Lever Control - 5547)	**375** (Lever Control - 5575)	**376T** (Thumbturn Control - 5547)
376T WDC (376T for Wood Door)	**379L** (Rim)		

Control Lever Styles 06 Lever Standard

03K (03 Knurled Lever)	**06K** (06 Knurled Lever)	**01, 02, 03, 06, 07, 12, 17** (Levers)

Mortise Locks

LL (Less Lock)	**7500** (Standard Mortise)	**E7500** (Electric Unlocking)

Mortise Lock E7500

Specify FS (Fail Safe) or **FSE** (Fail Secure)

DC standard, specify **AC** if required.

24VDC standard, specify 12VDC if required.

Mortise Lock Finish

US3 (Bright Brass)	**US4** (Satin Brass)	**US10** (Satin Bronze)	**US10B** (Satin Bronze-Oil Rubbed)
US10A (Satin Bronze-no Lacquer)	**US9A** (Pol. Bronze-no Lacquer)	**US32D** (Satin Stainless)	**US32** (Bright Stainless)

Centerline Options

NY5547 (Lever at 45 13/16")	**NYCA5547** (Lever at 44")

Prices subject to change without notice.

Misc			
10WDA (#10WDA Cover Plate)	589 (WD Cover Plate)		

Door Material			
AL (Aluminum Door)	HM (Hollow Metal)	WD (Wood Door)	CP (Composite Door)

Door Thickness		
1.3/4 (1-3/4" Standard)	2 (2" Thickness)	2.1/4 (2-1/4" Thickness)

Door Application		
D (Double Egress)	P (Pair of Doors)	S (Single Door)

Prices subject to change without notice.

3' Devices shown are priced complete with standard trim, strikes, and sex bolts.
4', add $18 List.
Cylinders are not included in price.

EXIT HARDWARE

Rim Devices

(Price includes 1409 Strike)

	US26D	US10B	US10	US4/4A	US3/3A US26 643E	SPBLK	Weight lbs.	Standard Trim/Control/Cover Plate
55EO	2757	2737	2577	2463	2991	2991	8	–
55DT	3270	3250	3090	2890	3518	3518	10	550DT
55NL	3399	3379	3219	3011	3649	3649	11	550DT/110MD/WD
55NL-OP	2886	2866	2706	2584	3122	3122		110MD/WD
55L	3635	3615	3364	3250	3988	3869	13	379L*
55L-BE	3601	3581	3335	3221	3946	3835	13	379L-BE*

EXIT HARDWARE

Concealed Vertical Rod Devices

(Price includes 471U and 304L Strikes)

5547EO	3376	3596	3237	3136	3769	3769	14	–
5547DT	3889	4109	3750	3563	4296	4296	16	550DT
5547NL	4131	4351	4003	3753	4544	4544	16	555NL
5547NL-OP	3740	3960	3602	3451	4143	4143		555CA
** **5547L**	4253	4473	4114	3911	4704	4646	17	376L
** **5547L-BE**	4219	4439	4080	3876	4671	4612	17	376L-BE
5547TL	4621	4841	4523	4192	5088	5028	19	550DT/376T
5547TL-BE	4585	4805	4492	4153	5048	4992	19	550DT/376T-BE

FIRE EXIT HARDWARE

Concealed Vertical Rod Devices

HOLLOW METAL DOORS ONLY

(Price includes 301L Strike)

5547EO-F	3590	3793	3585	3486	3975	3975	15	–
5547DT-F	4103	4306	4098	3913	4502	4502	18	550DT
5547L-F	4322	4525	4406	4115	4767	4707	18	371L
5547L-BE-F	4286	4489	4327	4076	4727	4671	18	371L-BE
5547TL-F	4684	4887	4756	4417	5167	5107	19	609DT/376T
5547TL-BE-F	4648	4851	4725	4378	5127	5071	19	609DT/376-BE

55 Series Notes:

Handing - 55 Series devices are handed and field reversible. RHR handing is furnished standard when handing is not specified. Lever trim is handed and not field reversible, specify handing RHR or LHR.
* **55 Rim** - for solid wood doors the #10 WDA cover plate is supplied at an additonal **$52 List Add.**
** **5547L** - minimum control centerline of lever or thumbturn is 49-7/8" and the minimum stile width is 1-3/4".
5547L - if standard mounting height is required use 5547L-F x 371L
5547-F - Flush transom installation, specify #900614 Release Bracket, **$121 list add** per device.
Finish - US3A, US4A, SPBLK consult factory for lead time.

Prices subject to change without notice.

3' Devices shown are priced complete with standard trim, strikes, and sex bolts.
4', add $18 list.
Cylinders are not included in price.

EXIT HARDWARE

Wood Door Concealed Vertical Rod Devices

(Price includes 338 and 304L Strikes and Scalp Plate)

		US26D	US10B	US10	US4/4A	US3/3A US26 643E	SPBLK	Weight lbs.	Standard Trim/Control/Cover Plate
	5547WDC-EO	3867	3972	3333	3223	4099	4099	14	–
	5547WDC-DT	4380	4485	3846	3650	4626	4626	16	550DT
	5547WDC-NL	4622	4727	4099	3840	4874	4874	16	556NL
	5547WDC-NL-OP	4231	4336	3698	3538	4473	4473		556CA
**	**5547WDC-L**	4796	4901	4262	4050	5086	5028	17	376WDC-L/10WDA
**	**5547WDC-L-BE**	4762	4867	4228	4015	5053	4994	17	376WDC-L-BE/10WDA
	5547WDC-TL	5164	5269	4671	4331	5470	5410	19	550DT/376WDC-T/10WDA
	5547WDC-TL-BE	5128	5233	4640	4292	5430	5374	19	550DT/376WDC-T-BE/10WDA

FIRE EXIT HARDWARE

Wood Door Concealed Vertical Rod Devices

(Price includes 338 and 304L Strikes and Scalp Plate)

	5547WDC-EO-F	3887	4120	3669	3564	4121	4121	14	–
	5547WDC-DT-F	4400	4633	4182	3991	4648	4648	16	550DT
	5547WDC-NL-F	4642	4875	4435	4181	4896	4896	16	556NL
	5547WDC-NL-OP-F	4251	4484	4034	3879	4495	4495		556CA
**	**5547WDC-L-F**	4816	5049	4598	4391	5108	5050	18	376WDC-L/10WDA
**	**5547WDC-L-BE-F**	4782	5015	4564	4356	5075	5016	18	376WDC-L-BE/10WDA
	5547WDC-TL-F	5184	5417	5007	4672	5492	5432	19	550DT/376WDC-T/10WDA
	5547WDC-TL-BE-F	5148	5381	4976	4633	5452	5396	19	550DT/376WDC-T-BE/10WDA

5547WDC Series Notes:

Handing - 55 Series devices are handed and field reversible. RHR handing is furnished standard when handing is not specified. Lever trim is handed and not field reversible, specify handing RHR or LHR.

** **5547WDC-L-F** - minimum centerline 45-13/16".

Wood Frame applications - specify 472U (1 3/4" Dr.) or 473U (2 1/4" Dr.) Top Strike.

Finish - US3A, US4A, SPBLK consult factory for lead time.

Prices subject to change without notice.

3' Devices shown are priced complete with standard trim, strikes, and sex bolts.
4', add $18 list.
Cylinders are not included in price.

EXIT HARDWARE

Mortise Lock Devices

(Price includes 575 Strike)

	US26D	US10B	US10	US4/4A	US3/3A US26 643E	SPBLK	Weight lbs.	Standard Trim/Control/Cover Plate
5575EO	2592	3145	2461	2349	3016	3016	12	–
5575DT	3105	3658	2974	2776	3543	3543	15	550DT
5575NL	3105	3658	2974	2776	3543	3543	15	550DT
5575L	3460	4013	3458	3118	4005	3884	15	375L*
5575L-BE	3424	3977	3424	3077	3962	3848	15	375L-BE*
5575L-DT	3405	3958	3406	3063	3947	3829	15	375L-DT*

FIRE EXIT HARDWARE

Mortise Lock Devices

(Price includes 575 Strike)

5575EO-F	2805	3150	2638	2578	3235	3235	12	–
5575DT-F	3318	3663	3151	3005	3762	3762	15	550DT
5575NL-F	3318	3663	3151	3005	3762	3762	15	550DT
5575L-F	3673	4018	3635	3347	4224	4103	15	375L*
5575L-BE-F	3637	3982	3601	3306	4181	4067	15	375L-BE*

5575 Notes:

Handing - 55 Series devices are handed and field reversible. RHR handing is furnished standard when handing is not specified.
Lever trim is handed and not field reversible, specify handing RHR or LHR.
Door Thickness 2 1/4" - for wood door is a Special Order Product Consult factory for lead time
* **Wood Doors** - 589 cover plate is required for 5575 devices on wood doors and will be supplied at an additional price. Refer to page 98 for price by finish.
Finish - US3A, US4A, SPBLK consult factory for lead time.
Options for the 55 Series can be found on page 52.

Prices subject to change without notice.

88 Series • Finish Chart

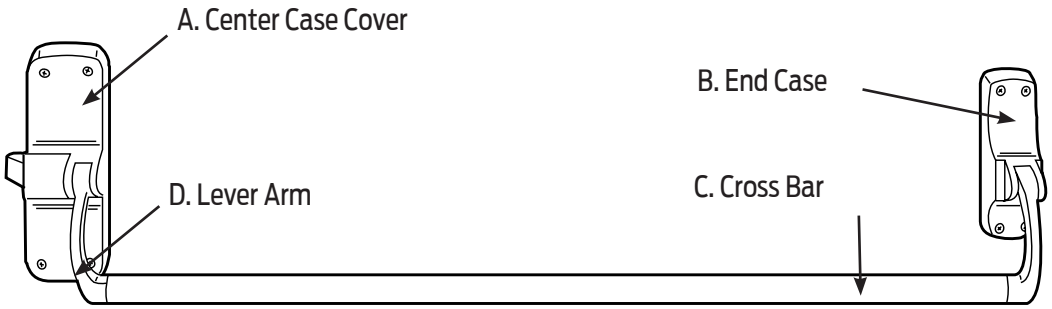

Standard Finishes

Color	US Number	BHMA Number	A, B, D	C - Cross Bar Finishes
Bright Brass	US3	605	Buffed Brass, Clear Coat	Buffed Brass, Clear Coat
Satin Brass	US4	606	Satin Brass, Clear Coat	Satin Brass, Clear Coat
Satin Bronze	US10	612	Plated/ Anodized	Satin Bronze US10
Satin Bronze, Oil-Rubbed	US10B	613	Oil-Rubbed	Oil Rubbed, US10B, 613
Polished Chrome	US26	625	Plated	Bright Stainless Steel US32, 629
Satin Chrome	US26D	626	Plated	Satin Stainless Steel US32D, 630
Black	SPBLK	693	Powder Coat	Powder Coat, SPBLK, 693
Aged Bronze	643E	–	Aged Bronze, Relieved	Aged Bronze, no Relief

Special Finishes

Color	US Number	BHMA Number	A, B, D	C - Touch Bar Trim Finishes
Bright Brass- no Lacquer	US3A	–	Buffed Brass	Bright Brass US3A
Satin Brass- no Lacquer	US4A	–	Satin Brass	Satin Brass US4A
Satin Chrome - Antimicrobial	US26D-AM	626-AM	AM Clear over Plated	AM - Clear over Satin Stainless Steel

Note: On a Fire Device "A" = Stainless Steel Substrate

88 Series Sex Bolt Quantities

Application	425 Sex Bolts (Optional)	For Composite or Wood Fire Doors 425 Sex Bolts (Supplied)
88 or 8875 with Trim	4	4
88 or 8875 EO (exit device only)	8	8
8827 with trim	12	12
8827 EO (exit device only)	16	16
8847	4	4

Prices subject to change without notice.

Type of Device

None (Rim)	**27** (Surface Vertical Rod)	**47** (Concealed Vertical Rod)	**75** (Mortise Lock)

Function

EO (Exit Only)	**DT** (Dummy Trim)	**L** (Lever-06 Standard)	**LDT** (Lever-Dummy Trim)
NL (Night Latch-Key Retracts)	**NLOP** (Night Latch, Opt. Pull)	**TLOP** (Turn Lever - Opt. Pull)	**TL** (Turn Lever)
K (Knob)	**KNL** (Knob Night Latch)	**KBE** (Knob Blank Escutcheon)	**KDT** (Knob Dummy)
TP (Thumbpiece)	**LBE** (Lever - Blank Escutcheon)	**TLBE** (Turn Lever - Blank Escutcheon)	
TPNL (Thumbpiece - Night Latch)	**TPBE** (Thumbpiece - Blank Escutcheon)		

Rating

None (Panic Exit Device)	**- F** (Fire Exit Device)

Device / Crossbar Finish

US3 (Bright Brass)	**US3A** (US3 - No Lacquer)	**US4** (Satin Brass)	**US4A** (US4 - No Lacquer)
US10 (Satin Bronze)	**US10B** (Brass, Oil Rubbed)	**US26** (Bright Chrome)	**US26D** (Satin Chrome)
SPBLK (Black)			

Device Handing

RHR (Right Hand Reverse)	**LHR** (Left Hand Reverse)

Cross Bar Options

RCB (Reinforced Crossbar)	**KN** (Knurled)

Switch Options

RX (Request to Exit)

Electric Options

E (Electric Unlocking)

Device Options

HH (Hurricane)	**CYL** (Include Cylinder)	**PL** (Include Pullman Latch)	**SEC** (Include Security Screws)
SNB (Include Sex Bolts)	**SLM** (Include SLM Blocking)	**FL** (8847-F Device)	**FL** (8827-F, not UL Fire application)

Rods For Surface / Concealed Vertical Devices only

OPR (1 piece Top Rod)	**LBR** (Less Bottom Rod)	**RG-27** (Rod / Latch Guard)	**RGO** (Rod Guard Only)

Strike Series

LS (Less Strike)	**LTS** (Less Top Strike)	**264** (Opt. Rim)	**260U/UF** (Opt. SV Flush Transom)
268 (Std. 88 Fire)	**299** (Std. 88 Rim)	**575** (Std. 8875 Mortise)	**575-2** (Opt. 8875 Mortise)
576A (Opt. 8875 1-3/4)	**576B** (Opt. 8875 2-1/4)	**1409** (Opt. 88 Rim)	**1410, 1606, 1609, 1610** (Opt. Rim)

Prices subject to change without notice.

88 Series • Summary (continued)

Bottom Strike Series

LBS (Less Bottom Strike)	**248L-4** (Surface)	**301L / 304L** (Mortise)	**385A** (Adjustable Mortise)

Strike Finish

US3 (Bright Brass)	**US4** (Satin Brass)	**US10** (Satin Bronze)	**US10B** (Satin Bronze-Oil Rubbed)
US19 (Flat Black)	**US26** (Bright Chrome)	**US26D** (Satin Chrome)	**US32** (Bright Stainless)
US32D (Satin Stainless)	**MD** (e-Moly)	**SP313** (Dark Bronze)	

Trim Options

LT (Less Trim)	**606 / 608** (Opt. Trim)	**880** (Std. Trim)	**880SA** (Std. Vert. Surface Applied)
110MD / 110WD (Std. on NL-OP)	**216D** (Cylinder Anchor)	**880WDF** (Std. 88-F Rim wood / composite door)	

Trim Finish

US3 / 3A (Bright Brass)	**US4 / 4A** (Satin Brass)	**US10** (Satin Bronze)	**US10B** (Satin Bronze-Oil Rubbed)
US26 (Bright Chrome)	**US26D** (Satin Chrome)	**SPBLK** (Black Painted)	

Control Options

LC (Less Control)	**371** (Lever - 8847-F)	**373** (Lever - 88 Rim, 8827 / 8875)	**376T** (Thumbturn Control -CV)
377T (Thumbturn - 8827)			

Control Lever Styles 06 Lever Standard

03K (03 Knurled Lever)	**06K** (06 Knurled Lever)	**01, 02, 03, 06, 07, 12, 17** (Levers)

Control Finish

US3 (Bright Brass)	**US4** (Satin Brass)	**US10** (Satin Bronze)	**US10B** (Satin Bronze-Oil Rubbed)
US26 (Bright Chrome)	**US26D** (Satin Chrome)	**SPBLK** (Black Painted)	

Mortise Lock E7500

7500 (Standard Mortise Lock)	**E7500** (Electric Unlocking)	**LL** (Less Lock)	**DC** standard, specify **AC** if required.
24VDC standard, specify 12VDC if required.		**Specify FS** (Fail Safe) or **FSE** (Fail Secure)	

Mortise Lock Finish

US3/ 3A (Bright Brass)	**US4 / 4A** (Satin Brass)	**US10** (Satin Bronze)	**US10B** (Satin Bronze-Oil Rubbed)
US32D (Satin Stainless)	**SPBLK** (Black)	**US19** (Flat Black)	**US32** (Bright Stainless)

Misc

LCP (Less Cover Plate)	**10WDA** (#10WDA Cover Plate)	**889R / 889M / 889V** (373L w / Sexbolts Cover Plates)

Door Material

AL (Aluminum Door)	**HM** (Hollow Metal)	**WD** (Wood Door)	**CP** (Composite Door)

Door Thickness

1.3/4 (1-3/4" Standard)	**2** (2" Thickness)	**2.1/4** (2-1/4" Thickness)

Door Application

D (Double Egress)	**P** (Pair of Doors)	**S** (Single Door)
MSV / MCV (Mortise Surface / Concealed Vert.)		

Prices subject to change without notice.

3' Devices shown are priced complete with standard trim and strikes.
4', add $18 list.
Cylinders and sex bolts are not included in price.

EXIT HARDWARE

Rim Devices

(Price includes 299 Strike)

	US26D	US10B	US10	US4/4A	US3/3A US15 US26 643E	SPBLK	Weight lbs.	Standard Trim/Control
** 88EO	1430	1595	1473	1389	1773	1773	11	–
88DT	1694	1878	1810	1594	2115	2115	13	880DT-R
88NL	1713	1900	1835	1606	2141	2141	13	880NL-R
88TP	1721	1906	1881	1666	2184	2184	14	880TP-R
88TP-BE	1721	1906	1881	1666	2184	2184	14	880TP-BE-R
88K	1772	1962	1906	1666	2210	2210	13	880K-R
88K-BE	1772	1962	1906	1666	2210	2210	13	880K-BE-R
88K-DT	1772	1962	1906	1666	2210	2210	13	880K-DT-R
88K-NL	1772	1962	1906	1666	2210	2210	13	880K-NL-R
88L	2103	2268	2053	1969	2565	2446	14	373L*
88L-BE	2069	2234	2018	1934	2525	2412	14	373L-BE*
88L-DT	2052	2217	1995	1911	2505	2395	14	373L-DT*

FIRE EXIT HARDWARE

Rim Devices

(Price includes 268 Strike)

** 88EO-F	1804	2035	1782	1697	2265	2265	11	–
88DT-F	2068	2318	2119	1902	2607	2607	13	880DT-R
88NL-F	2087	2340	2144	1914	2633	2633	13	880NL-R
88TP-F	2095	2346	2190	1974	2676	2676	13	880TP-R
88TP-BE-F	2095	2346	2190	1974	2676	2676	13	880TP-BE-R
88K-F	2146	2402	2215	1974	2702	2702	13	880K-R
88K-BE-F	2146	2402	2215	1974	2702	2702	13	880K-BE-R
88K-NL-F	2146	2402	2215	1974	2702	2702	13	880K-NL-R
88L-F	2477	2708	2362	2277	3057	2938	14	373L*
88L-BE-F	2443	2674	2327	2242	3017	2904	14	373L-BE*

88 Rim Notes:

Handing - 88-F Rim and all devices specified with lever trim are handed and not field reversible, specify handing RHR or LHR.
Finish - US15, US3A, US4A, consult factory for lead time.
* **Composite Doors** - 889 cover plate is required for sex bolt applications using 373 lever controls and will be supplied at an additional price. Refer to page 98 for price by finish.
** **Cylinder Plate for NLOP Function** - included with EO device.

Prices subject to change without notice.

3' Devices shown are priced complete with standard trim and strikes.
4', add $18 list.
Cylinders and sex bolts are not included in price unless noted.

EXIT HARDWARE

Surface Vertical Rod Devices

(Price includes 299, 248L-4, and 304L Strikes)

	US26D	US10B	US10	US4/4A	US3/3A US15 US26 643E	SPBLK	Weight lbs.	Standard Trim/Control
8827EO	2032	2215	1959	1847	2376	2376	13	–
8827DT	2296	2498	2296	2052	2718	2718	17	880DT-V&M
8827TP	2323	2526	2367	2124	2787	2787	17	880TP-V
8827TP-BE	2323	2526	2367	2124	2787	2787	17	880TP-BE-V
8827TP-NL	2323	2526	2367	2124	2787	2787	17	880TP-V
8827K	2374	2582	2392	2124	2813	2813	17	880K-V
8827K-BE	2374	2582	2392	2124	2813	2813	17	880K-BE-V
8827K-DT	2374	2582	2392	2124	2813	2813	17	880K-DT-V
8827K-NL	2374	2582	2392	2124	2813	2813	17	880K-V
8827L	2705	2888	2539	2427	3168	3049	17	373L*
8827L-BE	2671	2854	2504	2392	3128	3015	17	373L-BE*
8827L-DT	2654	2837	2481	2369	3108	2998	17	373L-DT*
8827TL	3028	3230	3069	2681	3510	3450	20	880DT-V&M/377T**
8827TL-BE	2992	3194	3038	2642	3470	3414	20	880DT-V&M/377T-BE**

FIRE EXIT HARDWARE

Surface Vertical Rod Devices

(Price includes 304L Strike)

8827EO-F	2778	2897	2626	2517	3121	3121	14	–
8827DT-F	3042	3180	2963	2722	3463	3463	18	880DT-V&M
8827TP-F	3069	3208	3034	2794	3532	3532	18	880TP-V
8827TP-BE-F	3069	3208	3034	2794	3532	3532	18	880TP-V
8827TP-NL-F	3069	3208	3034	2794	3532	3532	18	880TP-BE-V
8827K-F	3120	3264	3059	2794	3558	3558	17	880K-V
8827K-BE-F	3120	3264	3059	2794	3558	3558	17	880K-BE-V
8827K-NL-F	3120	3264	3059	2794	3558	3558	17	880K-V
8827L-F	3451	3570	3206	3097	3913	3794	19	373L*
8827L-BE-F	3417	3536	3171	3062	3873	3760	19	373L-BE*
8827TL-F	3774	3912	3736	3351	4255	4195	20	880DT-V&M/377T**
8827TL-BE-F	3738	3876	3705	3312	4215	4159	20	880DT-V&M/377T-BE**

8827 Notes:

Handing - Lever trim is handed and not field reversible, specify handing RHR or LHR.
Finish - US15, US3A, US4A, consult factory for lead time.
* **Composite Doors** - 889 cover plate is required for sex bolt applications using 373 lever controls and will be supplied at an additional price. Refer to page 98 for price by finish.
** **Wood Doors** - 10WDA cover plate is required for the 370 series controls and will be supplied at an additional, **$52 list add**.

Prices subject to change without notice.

3' Devices shown are priced complete with standard trim and strikes.
4', add $18 list.
Cylinders and sex bolts are not included in price.

FIRE EXIT HARDWARE

Concealed Vertical Rod Devices

(Price includes 301L Strike)
Hollow Metal Doors Only

	US26D	US10B	US10	US4/4A	US3/3A US15 US26 643E	SPBLK	Weight lbs.	Standard Trim/Control
8847EO-F	2414	2540	2374	2287	2834	2834	12	–
8847L-F	3146	3272	3195	2916	3626	3566	17	371L
8847L-BE-F	3110	3236	3116	2877	3586	3530	17	371L-BE
8847TL-F	3410	3555	3484	3121	3968	3908	18	880DT-V-SA/376T**
8847TL-BE-F	3374	3519	3453	3082	3928	3872	18	880DT-V-SA/376T-BE**

EXIT HARDWARE

Mortise Lock Devices

(Price includes 575 Strike)

8875EO	1928	2223	1986	1904	2281	2281	13	–
8875DT	2192	2506	2323	2109	2623	2623	15	880DT-V&M
8875NL	2211	2528	2348	2121	2649	2649	15	880NL-M
8875TP	2219	2534	2394	2181	2692	2692	16	880TP-M
8875TP-BE	2219	2534	2394	2181	2692	2692	16	880TP-BE-M
8875K	2270	2590	2419	2181	2718	2718	15	880K-M
8875K-BE	2270	2590	2419	2181	2718	2718	15	880K-BE-M
8875K-DT	2270	2590	2419	2181	2718	2718	15	880K-DT-M
8875L	2601	2896	2566	2484	3073	2954	16	373L*
8875L-BE	2567	2862	2531	2449	3033	2920	16	373L-BE*
8875L-DT	2550	2845	2508	2426	3013	2903	16	373L-DT*

FIRE EXIT HARDWARE

Mortise Lock Devices

(Price includes 575 Strike)

8875EO-F	2084	2688	2144	2062	2453	2453	13	–
8875DT-F	2348	2971	2481	2267	2795	2795	15	880DT-V&M
8875NL-F	2367	2993	2506	2279	2821	2821	15	880NL-M
8875TP-F	2375	2999	2552	2339	2864	2864	16	880TP-M
8875TP-BE-F	2375	2999	2552	2339	2864	2864	16	880TP-BE-M
8875K-F	2426	3055	2577	2339	2890	2890	15	880K-M
8875K-BE-F	2426	3055	2577	2339	2890	2890	15	880K-BE-M
8875L-F	2757	3361	2724	2642	3245	3126	16	373L*
8875L-BE-F	2723	3327	2689	2607	3205	3092	16	373L-BE*

8847/8875 Notes:

Handing - 8847-F, 8875, 8875-F and all devices specified with lever trim are handed and not field reversible, specify handing RHR or LHR.
Finish - US15, US3A, US4A, consult factory for lead time.
Dogging - 8847-F device is available with dogging less fire label at no additional charge. Specify 8847-F w/dogging. Consult factory for lead time.
* **Composite Doors** - 889 cover plate is required for sex bolt applications using 373 lever controls and will be supplied at an additional price. Refer to page 98 for price by finish.
** **Wood Doors** - 10WDA cover plate is required for the 370 series controls and will be supplied at an additional, **$52 list add**.

Prices subject to change without notice.

Crossbar Options

Suffix		List Add
RCB	Reinforced Crossbar	105
KN	Knurled Crossbar	121

Pullman Latches

Prefix		List Add
PL	8827 Device PL Top and PL Bottom (Non-Fire Device only)	224
ES	ES Pullman Top Latch for 5547 Device (Metal doors, LBR only)	271

Flush Transom Installation

(Available on 8827-F and 8847-F)

Prefix		List Add
FL	8827-F Device (Not a UL Fire Exit Hardware listed application)	398
FL	8847-F Device	97

Electric Unlocking

Prefix		List Add
E **Electric Unlocking** **("BE" Lever Trim Only)**	Available on the following **Mortise Lock Devices:** **5575 Series:** 5575L-BE, 5575L-BE-F **8875 Series:** 8875K or K-BE, 8875K-F or K-BE-F, 8875L-BE, 8875L-BE-F, 8875TP or TP-BE, 8875TP-F or TP-BE-F Specify **Fail Secure (FSE) or Fail Safe (FS)**. For **24VAC** installation a **SO-24 Rectifier Kit** will be supplied at an additional **$42 list add**.	617
E **Electric Unlocking** **("BE" Trim Only)**	Available on the following **Lever** or **Thumbturn Controls**. **55 Series**: 371L-BE, 376L-BE, 376WDC-L-BE, 379L-BE, 376T-BE, 376WDC-T-BE **88 Series**: 371L-BE, 373L-BE, 376T-BE, 377T-BE 24VDC furnished standard. **Prefix** Lever or Thumbturn Control with **"E"**. Example: **E371L-BE**	617

Switches

Prefix		List Add
RX	Crossbar monitor switch in end case. Factory Install Only.	249

Centerline Options

Prefix		List Add
NY5547 (L,LBE, LDT)	Lever at 45 13/16", Device at std centerline 39-13/16" from finished floor, Up to 10" opening (Metal doors)	N/C
NYCA5547 (L,LBE,LDT)	Lever at 44", Device at centerline 38" from finished floor, Up to 8' opening (Metal doors)	75

Prices subject to change without notice.

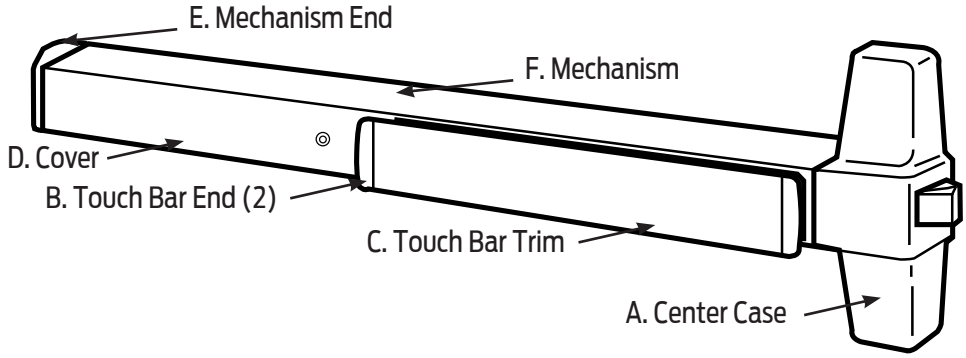

Standard Finishes

Color	US Number	BHMA Number	A, B, E	C -Touch Bar Trim Finishes	D, F
Bright Brass	US3	605	Bright Brass	Bright Brass US3, 605	Buffed Anodized
Satin Brass	US4	606	Satin Brass	Satin Brass US4, 606	Anodized
Satin Bronze	US10	612	Plated/Anodized	Satin Bronze US10, 725	Anodized
Satin Bronze, Oil-Rubbed	US10B	613	Oil-Rubbed	Oil-Rubbed, US10B	Powder Coat
Satin Nickel	US15	619	Plated, Clear Powder Coat	Satin Stainless Steel US32D, 630	Anodized
Polished Chrome	US26	625	Plated	Bright Stainless Steel US32, 629	Buffed Anodized
Satin Chrome	US26D	626	Plated	Satin Stainless Steel US32D, 630	Anodized
Anodized Aluminum	US28	628	Powder Coat	Satin Stainless Steel US32D, 630	Anodized
Satin Stainless Steel	US32D	630	Stainless Steel	Satin Stainless Steel US32D, 630	Anodized
Duranodic Dark Bronze	313	710	Powder Coat	Powder Coat 313, 710	Powder Coat
Black	315	711	Powder Coat	Powder Coat 315, 711	Powder Coat
Aged Bronze, 643E	–-	–-	(A) Aged Bronze, No Relief (B, E) Relieved Aged Bronze	Relieved Aged Bronze	Aged Bronze, No Relief

US32D and US15 finishes available on Series 98 only.

Special Finishes

Color	US Number	BHMA Number	A, B, E	C -Touch Bar Trim Finishes	D, F
Bright Bronze	US9	611	Plated	Bright Bronze US9, 611	Buffed Anodized
Satin Chrome, Antimicrobial	US26D-AM	626-AM	AM Clear over Chrome	AM Clear over Satin Stainless Steel US32D, 630	AM Clear over Anodized
Satin Stainless Steel, Antimicrobial	US32D-AM	630-AM	AM Clear over Stainless Steel	AM Clear over Satin Stainless Steel US32D, 630	AM Clear over Anodized
Powder Coat	RAL # *	–-	Powder Coat	Powder Coat	Powder Coat

* See Finish page for optional RAL color information.

FINISH NOTES:
US32D and US15 finishes available on Series 98 only.
Devices ordered in **US28** and **US32D** will be supplied with Trims in **US26D**.

98/99 Series Sex Bolt Quantities

Application	Sex Bolt 325 (Supplied)	425 Sex Bolt (Supplied)	425 Sex Bolt (Optional)	825 Sex Bolt (Supplied)
DT, EO, NL, TP, K or L Device with trim			2	
99 NLOP Device with 110MD/WD			6	
9927 NLOP Device with 110MD/WD			6	
99 EO Device (exit device only)			6	
9927 EO Device (exit device only)			6	
9947 EO Device (exit device only)			6	
99-F Wood Door with trim				2
Windstorm Device	12	6		

Prices subject to change without notice.

Indicates products that have EPD documentation available and meet LEED v4.

98/99 Series • Summary

Type of Device

None (Rim)	**27** (Surface Vertical Rod)	**57** (Surface Three Point Latch)	**75** (Mortise Lock)
47 / 48 (Concealed Vertical Rod)	**47 WDC** (Wood Door Concealed Vertical Rod)		**49** (Concealed Vertical Cable)
50WDC (Wood Door Concealed Vertical Cable)			

Function

EO (Exit Only)	**DT** (Dummy Trim)	**L** (Lever-06 Standard)	**LDT** (Lever-Dummy Trim)
NL (Night Latch-Key Retracts)	**NLOP** (Night Latch, Opt. Pull)	**LNL** (Lever-Night Latch)	**TL** (Turn Lever)
HL (Hospital Latch)	**K** (Knob)	**KBE** (Knob Blank Escutcheon)	**KDT** (Knob Dummy)
KNL (Knob Night Latch)	**LBE** (Lever-Blank Escutcheon)	**TLBE** (Turn Lever - Blank Escutcheon)	
TP (Thumbpiece)	**TLOP** (Turn Lever, Opt. Pull)	**TPBE** (Thumbpiece - Blank Escutcheon)	

Rating

None (Panic Exit Device)	**- F** (Fire Exit Device)

Device Finish

US3 (Bright Brass)	**US4** (Satin Brass)	**US10** (Satin Bronze)	**US28** (Anodized Aluminum)
US26 (Bright Chrome)	**US26D** (Satin Chrome)	**US26D-AM** (Antimicrobial)	**313** (Duranodic Dark Bronze)
315 (Black)	**643E** (Aged Bronze)	**US10B** (Satin Bronze- Oil Rubbed)	
US32D / 32D-AM (Satin Stainless Steel) & **US15** (Satin Nickel) 98 Series only			

Device Length (Feet and Inches)

2' (2' Device for 2' Door - Vertical Device only)	**3'** (3' Device for 2' 4" - 3' Door)	**4'** (4' Device for 2' 10" - 4' Door)

Device Handing

RHR (Right Hand Reverse)	**LHR** (Left Hand Reverse)

Touch Bar Trim Options

RSS (Emergency Exit- US32D only)	**PUSH** (Embossed - Push)	**SG** (Safety Glow)	**KN** (Knurled)	**BRAILLE** (Braille)
WH (Drainage/Weep Holes in Mechanism Case - 3' device will have 4 holes - 6" spacing, 4' device will have 6 holes - 6" spacing)				

Touch Bar Finish

US3 (Bright Brass)	**US4** (Satin Brass)	**US10** (Satin Bronze)	**US19** (Flat Black)
US32 (Bright Stainless)	**340** (Photoluminescent)	**US32D** (Satin Stainless)	**313** (Duranodic Dark Bronze)

Dogging Options

CD (Cylinder Dogging - Panic Only)	**HD** (Hex Dogging)	**LD** (Less Dogging)	**CI** (Cylinder Dogging Indicator)
DI (Dogging Indicator)	**SD** (Special Dogging)	**CDSI** (Cylinder Dogging w/Indicator)	**HDSI** (Hex Dogging w/Indicator)

Switch Options

LX (Latchbolt Monitoring)	**LXLC** (LBM Low Current)	**RX** (Request to Exit)	**RXLC** (Request to Exit Low Current)
RX2 (Request to Exit Double Switch)	**LXRX** (LBM Request to Exit)	**LXRXLC** (LBM Request to Exit Low Current)	
WP-RX (Waterproof Request to Exit)			

Prices subject to change without notice.

Indicates products that have EPD documentation available and meet LEED v4.

Electric Options

EL (Electric Latch Retraction)	**FS** (Fail Safe)	**E** (Electric Mortise Lock)	**ES** (Electric Strike)
FSE (Fail Secure)	**CX** (Chexit - Controlled Exit)	**CXR** (CX-RCM)	**ALK** (Standard Alarm Kit)
SS (Signal Switch, Rim or Mortise)	**QEL** (Quiet Electric Latch Retraction)		

Device Options

HHCX (Hurricane CX)	**HHCXR** (Hurricane CX-RCM)	**HH** (Hurricane)	**WS** (Windstorm)
PL (Include Pullman Latch)	**AX** (Accessible Device)	**SNB** (Sex Bolts)	**GBK** (Include GBK)
-2 (Double Cylinder)	**SLM** (Include SLM Blocking)	**PN** (Pneumatic)	**CYL** (Include Cylinder)
SEC (Include Security Screws)	**-2S1** (Cylinder Dogging with Security Indicator)		

Rods For Surface / Concealed Vertical Devices only

OPR (1 piece Top Rod) **LBRAFL** (LBR with Aux. Fire Pin)	**LBL** (Less Bottom Cable)	**LBLAFL** (LBL with Aux. Fire Pin)	**LBR** (Less Bottom Rod)

Strike Series

LS (Less Strike)	**LTS** (Less Top Strike)	**260U / 260UF** (Opt. SV Flush Transom)	**249** (Std. 49)
264 (Opt. Rim or SV)	**283** (Opt. CV - Wood Frame)	**299 / 299F** (Std. SV)	**338** (Std. CV)
499F (Std. SV Fire LBR)	**575** / 575-2 (Std. Mortise)	**576A** (Mortise, pairs 1-3/4 Dr)	**576B** (Mortise, pairs 2-1/4 Dr)
		1409, 1410, 1439, 1606, 1609 (Opt. Rim)	

Bottom Strike Series

LBS (Less Bottom Strike)	**248L-4** (Surface)	**304L** (Mortise)	**349** (Std. 49)	**385A** (Adjustable Mortise)

Strike Finish

US3 (Bright Brass)	**US4** (Satin Brass)	**US10** (Satin Bronze)	**US10B** (Satin Bronze-Oil Rubbed)
US19 (Flat Black)	**US26** (Bright Chrome)	**US26D** (Satin Chrome)	**US32** (Bright Stainless)
US32D (Satin Stainless)	**MD** (e-Moly)	**SP10** (Sprayed Bronze)	**SP313** (Dark Bronze)

Trim Options

LT (Less Trim)	**RX996** (Request to Exit 996)	**VR910** (Vandal Resistant)	**110MD / 110WD** (Std. on NL-OP)
392-7 (Opt. Pull Dummy Trim)	**990** (Std. Rim)	**996** (Std. Lever Trim)	**E996** (Electric 996)
697 / 697WDF (Opt. Lever Trim)	**696 / 696WDF** (Opt. Lever Trim)		

Trim / Control / Mortise Finish

US3 (Bright Brass)	**US4** (Satin Brass)	**US10** (Satin Bronze)	**US10B** (Satin Bronze-Oil Rubbed)
US26 (Bright Chrome)	**US26D** (Satin Chrome)	**SPBLK** (Black Painted)	**313** (Duranodic Dark Bronze)
US15 (Satin Nickel)	**US19** (Flat Black)	**US26D-AM** (Antimicrobial)	**US32** (Bright Stainless)
US32D (Satin Stainless)			

Control Options

LC (Less Control)	**374T** (Thumbturn Control - SV)	**376T / 376T WDC** (Thumbturn Control - CV)

Prices subject to change without notice.

Indicates products that have EPD documentation available and meet LEED v4.

Trim Lever Styles 06 Lever Standard

ACC (Accent Lever)	**AST** (Asti Lever)	**MER** (Merona Lever)	**STA** (St. Anne Lever)
03K (03 Knurled Lever)	**06K** (06 Knurled Lever)	**01, 02, 03, 05, 06, 07, 12, 16, 17, 18** (Levers)	
03 SS, 06 SS, 17 SS, LAT SS, LON SS, M57, M62 (Stainless Steel Levers)		**LAT** (Latitude)	**LON** (Longitude)
M51, M52, M53, M54, M55, M56, M61, M63, M81, M82, M83, M84, M85, ME1, ME2, ME3			

Mortise Lock

LL (Less Lock)	**7500** (Standard Mortise)	**SS7500** (Signal Switch)	**7500-2** (Double Cylinder)
E7500 (Electric Unlocking specify FS - Fail Safe or FSE - Fail Secure, 12V or 24V and AC or DC)			

Chexit Options

B15 (BOCA 15 Second Delay)	**0** (0 Second Delay)	**15** (15 Second Delay)	**30** (30 Second Delay)
LRG (Less Rod Guards)	**RGO** (Rod Guards Only)	**M15** (15 Second Mute Delay)	**INF** (Infinite Delay)

Misc

CE (CE Labeled)	**LCP** (Less Cover Plate)	**10WDA** (#10WDA Cover Plate)
RAT REL (Ratchet Release Assy)	**10CABLE** (10' Cable)	**CON** (Connectors)

Door Material

AL (Aluminum Door)	**HM** (Hollow Metal)	**WD** (Wood Door)	**CP** (Composite Door)
CLAD2 (Insulclad - 1/2")	**CLAD4** (Insulclad - 1/4")	**SC** (Steelcraft, HH Device Only)	

Door Thickness

1.3/4 (1-3/4" Standard)	**2** (2" Thickness)	**2.1/4** (2-1/4" Thickness)

Door Application

D (Double Egress)	**P** (Pair of Doors)	**S** (Single Door)

APPLICATION NOTE FOR 2' DEVICE:
Available on Surface and Concealed Vertical (panic and fire).
When vertical rod devices are used on both doors of a pair, operation of the inactive door (smaller door) will not disengage the active door, creating a potential safety issue for those using the inactive door during an emergency. In addition, standard hex or cylinder dogging is not available. If dogging is required, special center case dogging is available for 98/9927/47 devices. Prefix device with "SD".

For pairs of doors using one 2' door Von Duprin recommends the following hardware combinations listed below for optimum safety in an emergency.
1. Surface or Concealed Vertical device on the 2' door (inactive) and a mortise device on the larger door (active). This combination is used primarily on Hollow Metal door applications only.
2. Automatic Flush Bolt on the 2' door (inactive) and a Surface or Concealed Vertical device on the larger door (active).

NOTE: The 2' door width is not available with any Electrical, Chexit, Hurricane, Pneumatic or Windstorm options.

Prices subject to change without notice. Indicates products that have EPD documentation available and meet LEED v4.

3' Devices are priced complete with standard trim and strike(s).
4' add $18 list.
Cylinders and sex bolts are not included in price unless noted.

EXIT HARDWARE

Rim Devices

(Price includes 299 Strike)

	US26D	US28	US32D	313	US10	US4/4A	US3/3A US15 US26 643E	315	US10B	Weight lbs 3'	Weight lbs 4'	Standard Trim/Control
98/99EO	1397	1235	1421	1296	1416	1435	1627	1994	1592	14	17	–
98/99DT	1651	1489	1675	1569	1689	1640	1911	2267	1865	17	19	990DT
98/99NL	1670	1508	1694	1577	1700	1657	1918	2275	1873	17	19	990NL-R&V
98/99NL-OP	1526	1364	1550	1425	1545	1556	1758	2125	1721	15	18	110MD/WD
98/99TP	1761	1599	1785	1671	1778	1736	2019	2369	1967	16	20	990TP-R&V
98/99TP-BE	1761	1599	1785	1671	1778	1736	2019	2369	1967	16	20	990TP-BE-R&V
98/99K	1834	1672	1858	1756	1938	1818	2186	2454	2052	18	21	996K-R&V
98/99K-BE	1834	1672	1858	1756	1938	1818	2186	2454	2052	18	21	996K-BE-R&V
98/99K-DT	1823	1661	1847	1740	1922	1810	2164	2438	2036	18	21	996K-DT-R&V
98/99K-NL	1823	1661	1847	1740	1922	1810	2164	2438	2036	18	21	996K-NL-R&V
98/99L	1986	1824	2010	1901	2031	1988	2314	2599	2197	19	21	996L-R&V
98/99L-BE	1986	1824	2010	1901	2031	1988	2314	2599	2197	19	21	996L-BE-R&V
98/99L-DT	1855	1693	1879	1770	1943	1885	2176	2468	2066	19	21	996L-DT-R&V
98/99L-NL	1855	1693	1879	1770	1943	1885	2176	2468	2066	19	21	996L-NL-R&V

FIRE EXIT HARDWARE

Rim Devices

(Price includes 299F Strike for single door applications only.)
(For double door applications, the 499F Strike will be supplied at an additional **$105 list add**.)

98/99EO-F	1555	1446	1610	1535	1613	1693	1834	2224	1887	10	13	–
98/99DT-F	1809	1700	1864	1808	1886	1898	2118	2497	2160	14	16	990DT
98/99NL-F	1828	1719	1883	1816	1897	1915	2125	2505	2168	14	16	990NL-R&V
98/99NL-OP-F	1684	1575	1739	1664	1742	1814	1965	2355	2016	11	14	110MD/WD
98/99TP-F	1919	1810	1974	1910	1975	1994	2226	2599	2262	15	17	990TP-R&V
98/99TP-BE-F	1919	1810	1974	1910	1975	1994	2226	2599	2262	15	17	990TP-BE-R&V
98/99K-F	1992	1883	2047	1995	2135	2076	2393	2684	2347	18	19	996K-R&V
98/99K-BE-F	1992	1883	2047	1995	2135	2076	2393	2684	2347	18	19	996K-BE-R&V
98/99K-NL-F	1981	1872	2036	1979	2119	2068	2371	2668	2331	18	19	996K-NL-R&V
98/99L-F	2144	2035	2199	2140	2228	2246	2521	2829	2492	16	18	996L-R&V
98/99L-BE-F	2144	2035	2199	2140	2228	2246	2521	2829	2492	16	18	996L-BE-R&V
98/99L-NL-F	2013	1904	2068	2009	2140	2143	2383	2698	2361	16	18	996L-NL-R&V

98/99 Rim Notes:

Finish - US32D and US15 finishes available on Series 98 only.
Finish - US3A, US4A, consult factory for lead time.
Finish - US10B finish has 313 finish device with US10B parts.

Prices subject to change without notice.

Indicates products that have EPD documentation available and meet LEED v4.

3' Devices are priced complete with standard trim and strike(s).
2' add $75 list, 4' add $18 list.
Cylinders and sex bolts are not included in price unless noted.

EXIT HARDWARE

Surface Vertical Rod Devices

(Price includes 299, 248L-4, 304L Strikes and Sex Bolts for Latches)

	US26D	US28	US32D	313	US10	US4/4A	US3/3A US15 US26 643E	315	US10B	Weight lbs. 2'	3'	4'	Standard Trim/Control /Cover Plate
98/9927EO	2020	1843	2132	1967	2051	2103	2305	2695	2396	16	18	20	–
98/9927DT	2274	2097	2386	2240	2324	2308	2589	2968	2669	16	19	22	990DT
98/9927NL	2293	2116	2405	2248	2335	2325	2596	2976	2677	16	19	22	990NL-R&V
98/9927NL-OP	2149	1972	2261	2096	2180	2224	2436	2826	2525	16	19	22	110MD/WD
98/9927TP	2384	2207	2496	2342	2413	2404	2697	3070	2771	17	20	23	990TP-R&V
98/9927TP-BE	2384	2207	2496	2342	2413	2404	2697	3070	2771	17	20	23	990TP-BE-R&V
98/9927K	2457	2280	2569	2427	2573	2486	2864	3155	2856	20	22	24	996K-R&V
98/9927K-BE	2457	2280	2569	2427	2573	2486	2864	3155	2856	20	22	24	996K-BE-R&V
98/9927K-DT	2446	2269	2558	2411	2557	2478	2842	3139	2840	20	22	24	996K-DT-R&V
98/9927K-NL	2446	2269	2558	2411	2557	2478	2842	3139	2840	20	22	24	996K-NL-R&V
98/9927L	2609	2432	2721	2572	2666	2656	2992	3300	3001	20	22	24	996L-R&V
98/9927L-BE	2609	2432	2721	2572	2666	2656	2992	3300	3001	20	22	24	996L-BE-R&V
98/9927L-DT	2478	2301	2590	2441	2578	2553	2854	3169	2870	20	22	24	996L-DT-R&V
98/9927L-NL	2478	2301	2590	2441	2578	2553	2854	3169	2870	20	22	24	996L-NL-R&V
98/9927TL	3006	2829	3118	2972	3097	2937	3381	3700	3401	22	24	26	990DT/374T*
98/9927TL-BE	2970	2793	3082	2936	3066	2898	3341	3664	3365	22	24	26	990DT/374T-BE*

FIRE EXIT HARDWARE

Surface Vertical Rod Devices

(Price includes 299F, 304L Strikes and Sex Bolts for Latches)

98/9927EO-F	2295	2133	2413	2267	2342	2428	2616	2969	2779	13	16	19	–
98/9927DT-F	2549	2387	2667	2540	2615	2633	2900	3242	3052	19	20	21	990DT
98/9927NL-F	2568	2406	2686	2548	2626	2650	2907	3250	3060	19	20	21	990NL-R&V
98/9927NL-OP-F	2424	2262	2542	2396	2471	2549	2747	3100	2908	19	20	21	110MD/WD
98/9927TP-F	2659	2497	2777	2642	2704	2729	3008	3344	3154	17	19	21	990TP-R&V
98/9927TP-BE-F	2659	2497	2777	2642	2704	2729	3008	3344	3154	17	19	21	990TP-BE-R&V
98/9927K-F	2732	2570	2850	2727	2864	2811	3175	3429	3239	21	22	23	996K-R&V
98/9927K-BE-F	2732	2570	2850	2727	2864	2811	3175	3429	3239	21	22	23	996K-BE-R&V
98/9927K-NL-F	2721	2559	2839	2711	2848	2803	3153	3413	3223	21	22	23	996K-NL-R&V
98/9927L-F	2884	2722	3002	2872	2957	2981	3303	3574	3384	19	22	25	996L-R&V
98/9927L-BE-F	2884	2722	3002	2872	2957	2981	3303	3574	3384	19	22	25	996L-BE-R&V
98/9927L-NL-F	2753	2591	2871	2741	2869	2878	3165	3443	3253	19	22	25	996L-NL-R&V
98/9927TL-F	3281	3119	3399	3272	3388	3262	3692	3974	3784	19	22	25	990DT/374T*
98/9927TL-BE-F	3245	3083	3363	3236	3357	3223	3652	3938	3748	19	22	25	990DT/374T-BE*

98/9927 Notes:

Finish - US32D and US15 finishes available on Series 98 only.
Finish - US3A, US4A, consult factory for lead time.
Finish - US10B finish has 313 finish device with US10B parts.
* **Wood Doors** - 10WDA cover plate is required for the 370 series controls and will be supplied at an additional, **$52 list add**.

Prices subject to change without notice. Indicates products that have EPD documentation available and meet LEED v4.

3' Devices are priced complete with standard trim and strike(s).
2' add $75 list, 4' add $18 list.
Cylinders and sex bolts are not include in price unless noted.

EXIT HARDWARE

Concealed Vertical Rod Devices

(Price includes 338 and 385A Strikes)

	US26D	US28	US32D	313	US10	US4/4A	US3/3A US15 US26 643E	315	US10B	Weight lbs. 2'	3'	4'	Standard Trim/Control /Cover Plate
98/9947EO	2126	1888	2173	2040	2132	2210	2329	2760	2485	15	17	19	–
98/9947DT	2380	2142	2427	2313	2405	2415	2613	3033	2758	15	19	23	990DT
98/9947NL	2399	2161	2446	2321	2416	2432	2620	3041	2766	15	19	23	990NL-R&V
98/9947NL-OP	2255	2017	2302	2169	2261	2331	2460	2891	2614	15	19	23	110MD/WD
98/9947TP	2490	2252	2537	2415	2494	2511	2721	3135	2860	16	19	22	990TP-R&V
98/9947TP-BE	2490	2252	2537	2415	2494	2511	2721	3135	2860	16	19	22	990TP-BE-R&V
98/9947K	2563	2325	2610	2500	2654	2593	2888	3220	2945	17	21	25	996K-R&V
98/9947K-BE	2563	2325	2610	2500	2654	2593	2888	3220	2945	17	21	25	996K-BE-R&V
98/9947K-DT	2552	2314	2599	2484	2638	2585	2866	3204	2929	17	21	25	996K-DT-R&V
98/9947K-NL	2552	2314	2599	2484	2638	2585	2866	3204	2929	17	21	25	996K-NL-R&V
98/9947L	2715	2477	2762	2645	2747	2763	3016	3365	3090	21	23	25	996L-R&V
98/9947L-BE	2715	2477	2762	2645	2747	2763	3016	3365	3090	21	23	25	996L-BE-R&V
98/9947L-DT	2584	2346	2631	2514	2659	2660	2878	3234	2959	21	23	25	996L-DT-R&V
98/9947L-NL	2584	2346	2631	2514	2659	2660	2878	3234	2959	21	23	25	996L-NL-R&V
98/9947TL	3112	2874	3159	3045	3178	3044	3405	3765	3490	21	23	25	990DT/376T*
98/9947TL-BE	3076	2838	3123	3009	3147	3005	3365	3729	3454	21	23	25	990DT/376T-BE*

FIRE EXIT HARDWARE

Concealed Vertical Rod Devices

(Price includes 338 and 385A Strikes)

98/9947EO-F	2401	2187	2478	2419	2499	2594	2787	3124	2955	15	17	19	–
98/9947DT-F	2655	2441	2732	2692	2772	2799	3071	3397	3228	15	19	23	990DT
98/9947NL-F	2674	2460	2751	2700	2783	2816	3078	3405	3236	15	19	23	990NL-R&V
98/9947NL-OP-F	2530	2316	2607	2548	2628	2715	2918	3255	3084	15	19	23	110MD
98/9947TP-F	2765	2551	2842	2794	2861	2895	3179	3499	3330	16	19	22	990TP-R&V
98/9947TP-BE-F	2765	2551	2842	2794	2861	2895	3179	3499	3330	16	19	22	990TP-BE-R&V
98/9947K-F	2838	2624	2915	2879	3021	2977	3346	3584	3415	17	21	25	996K-R&V
98/9947K-BE-F	2838	2624	2915	2879	3021	2977	3346	3584	3415	17	21	25	996K-BE-R&V
98/9947K-NL-F	2827	2613	2904	2863	3005	2969	3324	3568	3399	17	21	25	996K-NL-R&V
98/9947L-F	2990	2776	3067	3024	3114	3147	3474	3729	3560	21	23	25	996L-R&V
98/9947L-BE-F	2990	2776	3067	3024	3114	3147	3474	3729	3560	21	23	25	996L-BE-R&V
98/9947L-NL-F	2859	2645	2936	2893	3026	3044	3336	3598	3429	21	23	25	996L-NL-R&V
98/9947TL-F	3387	3173	3464	3424	3545	3428	3863	4129	3960	21	23	25	990DT/376T*
98/9947TL-BE-F	3351	3137	3428	3388	3514	3389	3823	4093	3924	21	23	25	990DT/376T-BE*

98/9947 Notes:

Finish - US32D and US15 finishes available on Series 98 only.
Finish - US3A, US4A, consult factory for lead time.
Finish - US10B finish has 313 finish device with US10B parts.
* **Wood Doors** - 10WDA cover plate is required for the 370 series controls and will be supplied at an additional, **$52 list add**.

Prices subject to change without notice.

Indicates products that have EPD documentation available and meet LEED v4.

3' Devices are priced complete with standard trim and strike(s).
2' add $75 list, 4' add $18 list.
Cylinders and sex bolts are not include in price unless noted

EXIT HARDWARE

Wood Door Concealed Vertical Rod Devices

(Price includes 338 and 385A Strikes, Sex Bolts, and 8" Scalp Plate)

	US26D	US28	US32D	313	US10	US4/4A	US3/3A US26 643E	US15	315	US10B	Weight lbs. 2'	3'	4'	Standard Trim/Control
98/9947WDC-EO	2344	2104	2402	2280	2368	2451	2633	2549	2998	2697	15	17	19	–
98/9947WDC-DT	2598	2358	2656	2553	2641	2656	2917	2833	3271	2970	15	19	23	990DT
98/9947WDC-NL	2617	2377	2675	2561	2652	2673	2924	2840	3279	2978	15	19	23	990NL-R&V
98/9947WDC-NL-OP	2473	2233	2531	2409	2497	2572	2764	2680	3129	2826	15	19	23	110WD
98/9947WDC-TP	2708	2468	2766	2655	2730	2752	3025	2941	3373	3072	16	19	22	990TP-R&V
98/9947WDC-TP-BE	2708	2468	2766	2655	2730	2752	3025	2941	3373	3072	16	19	22	990TP-BE-R&V
98/9947WDC-K	2781	2541	2839	2740	2890	2834	3192	3108	3458	3157	17	21	25	996K-R&V
98/9947WDC-K-BE	2781	2541	2839	2740	2890	2834	3192	3108	3458	3157	17	21	25	996K-BE-R&V
98/9947WDC-K-DT	2770	2530	2828	2724	2874	2826	3170	3086	3442	3141	17	21	25	996K-DT-R&V
98/9947WDC-K-NL	2770	2530	2828	2724	2874	2826	3170	3086	3442	3141	17	21	25	996K-NL-R&V
98/9947WDC-L	2933	2693	2991	2885	2983	3004	3320	3236	3603	3302	21	23	25	996L-R&V
98/9947WDC-L-BE	2933	2693	2991	2885	2983	3004	3320	3236	3603	3302	21	23	25	996L-BE-R&V
98/9947WDC-L-DT	2802	2562	2860	2754	2895	2901	3182	3098	3472	3171	21	23	25	996L-DT-R&V
98/9947WDC-L-NL	2802	2562	2860	2754	2895	2901	3182	3098	3472	3171	21	23	25	996L-NL-R&V
98/9947WDC-TL	3382	3142	3440	3337	3466	3337	3761	3677	4055	3754	21	23	25	990DT/376WDC-T/10WDA*
98/9947WDC-TL-BE	3346	3106	3404	3301	3435	3298	3721	3637	4019	3718	21	23	25	990DT/376WDC-T-BE/10WDA*

FIRE EXIT HARDWARE

Wood Door Concealed Vertical Rod Devices

(Price includes 338 and 385A Strikes, Sex Bolts and 8" Scalp Plate)

98/9947WDC-EO-F	2712	2440	2789	2645	2750	2846	3055	2971	3354	3151	15	17	19	–
98/9947WDC-DT-F	2966	2694	3043	2918	3023	3051	3339	3255	3627	3424	15	19	23	990DT
98/9947WDC-NL-F	2985	2713	3062	2926	3034	3068	3346	3262	3635	3432	15	19	23	990NL-R&V
98/9947WDC-NL-OP-F	2841	2569	2918	2774	2879	2967	3186	3102	3485	3280	15	19	23	110WD
98/9947WDC-TP-F	3076	2804	3153	3020	3112	3147	3447	3363	3729	3526	16	19	22	990TP-R&V
98/9947WDC-TP-BE-F	3076	2804	3153	3020	3112	3147	3447	3363	3729	3526	16	19	22	990TP-BE-R&V
98/9947WDC-K-F	3149	2877	3226	3105	3272	3229	3614	3530	3814	3611	17	21	25	996K-R&V
98/9947WDC-K-BE-F	3149	2877	3226	3105	3272	3229	3614	3530	3814	3611	17	21	25	996K-BE-R&V
98/9947WDC-K-NL-F	3138	2866	3215	3089	3256	3221	3592	3508	3798	3595	17	21	25	996K-NL-R&V
98/9947WDC-L-F	3301	3029	3378	3250	3365	3399	3742	3658	3959	3756	21	23	25	996L-R&V
98/9947WDC-L-BE-F	3301	3029	3378	3250	3365	3399	3742	3658	3959	3756	21	23	25	996L-BE-R&V
98/9947WDC-L-NL-F	3170	2898	3247	3119	3277	3296	3604	3520	3828	3625	21	23	25	996L-NL-R&V
98/9947WDC-TL-F	3750	3478	3827	3702	3848	3732	4183	4099	4411	4208	21	23	25	990DT/376WDC-T/10WDA*
98/9947WDC-TL-BE-F	3714	3442	3791	3666	3817	3693	4143	4059	4375	4172	21	23	25	990DT/376WDC-T-BE/10WDA*

98/9947WDC Notes:

Finish - US32D and US15 finishes available on Series 98 only.
Finish - US3A, US4A, consult factory for lead time.
Finish - US10B finish has 313 finish device with US10B parts.
***Wood Frame Applications** - the 283 Strike or WDF must be specified. Specify door thickness.

Prices subject to change without notice. Indicates products that have EPD documentation available and meet LEED v4.

3' Devices are priced complete with standard trim and strike(s).
2' add $75 list, 4' add $18 list.
Cylinders and sex bolts are not included in price unless noted.

EXIT HARDWARE

Concealed Vertical Rod Devices

(Price includes 338 and 385A Strikes)

	US26D	US28	US32D	313	US10	US4/4A	US3/3A US15 US26 643E	315	US10B	Weight lbs. 2'	3'	4'	Standard Trim/Control
98/9948EO	2415	2175	2461	2328	2420	2497	2617	3047	2772	15	17	19	–
98/9948DT	2669	2429	2715	2601	2693	2702	2901	3320	3045	15	19	23	990DT
98/9948NL	2688	2448	2734	2609	2704	2719	2908	3328	3053	15	19	23	990NL-R&V
98/9948NL-OP	2544	2304	2590	2457	2549	2618	2748	3178	2901	15	19	23	110MD
98/9948TP	2779	2539	2825	2703	2782	2798	3009	3422	3147	16	19	22	990TP-R&V
98/9948TP-BE	2779	2539	2825	2703	2782	2798	3009	3422	3147	16	19	22	990TP-BE-R&V
98/9948K	2852	2612	2898	2788	2942	2880	3176	3507	3232	17	21	25	996K-R&V
98/9948K-BE	2852	2612	2898	2788	2942	2880	3176	3507	3232	17	21	25	996K-BE-R&V
98/9948K-DT	2841	2601	2887	2772	2926	2872	3154	3491	3216	17	21	25	996K-DT-R&V
98/9948K-NL	2841	2601	2887	2772	2926	2872	3154	3491	3216	17	21	25	996K-NL-R&V
98/9948L	3004	2764	3050	2933	3035	3050	3304	3652	3377	21	23	25	996L-R&V
98/9948L-BE	3004	2764	3050	2933	3035	3050	3304	3652	3377	21	23	25	996L-BE-R&V
98/9948L-DT	2873	2633	2919	2802	2947	2947	3166	3521	3246	21	23	25	996L-DT-R&V
98/9948L-NL	2873	2633	2919	2802	2947	2947	3166	3521	3246	21	23	25	996L-NL-R&V
98/9948TL	3401	3161	3447	3333	3466	3331	3693	4052	3777	21	23	25	990DT/376T
98/9948TL-BE	3365	3125	3411	3297	3435	3292	3653	4016	3741	21	23	25	990DT/376T-BE

FIRE EXIT HARDWARE

Concealed Vertical Rod Devices

(Price includes 338 and 385A Strikes)

98/9948EO-F	2690	2476	2766	2706	2788	2882	3074	3412	3243	15	17	19	–
98/9948DT-F	2944	2730	3020	2979	3061	3087	3358	3685	3516	15	19	23	990DT
98/9948NL-F	2963	2749	3039	2987	3072	3104	3365	3693	3524	15	19	23	990NL-R&V
98/9948NL-OP-F	2819	2605	2895	2835	2917	3003	3205	3543	3372	15	19	23	110MD
98/9948TP-F	3054	2840	3130	3081	3150	3183	3466	3787	3618	16	19	22	990TP-R&V
98/9948TP-BE-F	3054	2840	3130	3081	3150	3183	3466	3787	3618	16	19	22	990TP-BE-R&V
98/9948K-F	3127	2913	3203	3166	3310	3265	3633	3872	3703	17	21	25	996K-R&V
98/9948K-BE-F	3127	2913	3203	3166	3310	3265	3633	3872	3703	17	21	25	996K-BE-R&V
98/9948K-NL-F	3116	2902	3192	3150	3294	3257	3611	3856	3687	17	21	25	996K-NL-R&V
98/9948L-F	3279	3065	3355	3311	3403	3435	3761	4017	3848	21	23	25	996L-R&V
98/9948L-BE-F	3279	3065	3355	3311	3403	3435	3761	4017	3848	21	23	25	996L-BE-R&V
98/9948L-NL-F	3148	2934	3224	3180	3315	3332	3623	3886	3717	21	23	25	996L-NL-R&V
98/9948TL-F	3676	3462	3752	3711	3834	3716	4150	4417	4248	21	23	25	990DT/376T
98/9948TL-BE-F	3640	3426	3716	3675	3803	3677	4110	4381	4212	21	23	25	990DT/376T-BE

98/9948 Notes:

Finish - US32D and US15 finishes available on Series 98 only.
Finish - US3A, US4A, consult factory for lead time.
Finish - US10B finish has 313 finish device with US10B parts.

Prices subject to change without notice.

Indicates products that have EPD documentation available and meet LEED v4.

3' Devices are priced complete with standard trim and strike(s).
4' add $18 list.
Cylinders and sex bolts are not included in price unless noted.

EXIT HARDWARE

Surface Three Point Latch Devices

(Price includes 299(2), 248L-4, 304L Strikes and Sex Bolts for Latches)

	US26D	US28	US32D	313	US10	US4/4A	US3/3A US15 US26 643E	315	US10B	Weight lbs. 3'	Weight lbs. 4'	Standard Trim/Control
98/9957EO	2708	2413	2882	2617	2801	2903	3126	3340	3189	17	20	–
98/9957DT	2962	2667	3136	2890	3074	3108	3410	3613	3462	21	23	990DT
98/9957NL	2981	2686	3155	2898	3085	3125	3417	3621	3470	21	22	990NL-R&V
98/9957NL-OP	2837	2542	3011	2746	2930	3024	3257	3471	3318	21	22	110MD/WD
98/9957TP	3072	2777	3246	2992	3163	3204	3518	3715	3564	20	22	990TP-R&V
98/9957TP-BE	3072	2777	3246	2992	3163	3204	3518	3715	3564	20	22	990TP-BE-R&V
98/9957K	3145	2850	3319	3077	3323	3286	3685	3800	3649	23	24	996K-R&V
98/9957K-BE	3145	2850	3319	3077	3323	3286	3685	3800	3649	23	24	996K-BE-R&V
98/9957K-DT	3134	2839	3308	3061	3307	3278	3663	3784	3633	23	24	996K-DT-R&V
98/9957K-NL	3134	2839	3308	3061	3307	3278	3663	3784	3633	23	24	996K-NL-R&V
98/9957L	3297	3002	3471	3222	3416	3456	3813	3945	3794	23	26	996L-R&V
98/9957L-BE	3297	3002	3471	3222	3416	3456	3813	3945	3794	23	26	996L-BE-R&V
98/9957L-DT	3166	2871	3340	3091	3328	3353	3675	3814	3663	23	26	996L-DT-R&V
98/9957L-NL	3166	2871	3340	3091	3328	3353	3675	3814	3663	23	26	996L-NL-R&V
98/9957TL	3694	3399	3868	3622	3847	3737	4202	4345	4194	23	26	990DT/374T*
98/9957TL-BE	3658	3363	3832	3586	3816	3698	4162	4309	4158	23	26	990DT/374T-BE*

FIRE EXIT HARDWARE

Surface Three Point Latch Devices

(Price includes 299F(2), 304L Strikes and Sex Bolts for Latches)

98/9957EO-F	2885	2604	3054	2848	3039	3141	3152	3557	3481	18	19	–
98/9957DT-F	3139	2858	3308	3121	3312	3346	3436	3830	3754	19	22	990DT
98/9957NL-F	3158	2877	3327	3129	3323	3363	3443	3838	3762	19	22	990NL-R&V
98/9957NL-OP-F	3014	2733	3183	2977	3168	3262	3283	3688	3610	19	22	110MD/WD
98/9957TP-F	3249	2968	3418	3223	3401	3442	3544	3932	3856	20	23	990TP-R&V
98/9957TP-BE-F	3249	2968	3418	3223	3401	3442	3544	3932	3856	20	23	990TP-BE-R&V
98/9957K-F	3322	3041	3491	3308	3561	3524	3711	4017	3941	22	24	996K-R&V
98/9957K-BE-F	3322	3041	3491	3308	3561	3524	3711	4017	3941	22	24	996K-BE-R&V
98/9957K-NL-F	3311	3030	3480	3292	3545	3516	3689	4001	3925	22	24	996K-NL-R&V
98/9957L-F	3474	3193	3643	3453	3654	3694	3839	4162	4086	22	24	996L-R&V
98/9957L-BE-F	3474	3193	3643	3453	3654	3694	3839	4162	4086	22	24	996L-BE-R&V
98/9957L-NL-F	3343	3062	3512	3322	3566	3591	3701	4031	3955	22	24	996L-NL-R&V
98/9957TL-F	3871	3590	4040	3853	4085	3975	4228	4562	4486	22	24	990DT/374T*
98/9957TL-BE-F	3835	3554	4004	3817	4054	3936	4188	4526	4450	22	24	990DT/374T-BE*

98/9957 Notes:

Finish - US32D and US15 finishes available on Series 98 only.
Finish - US3A, US4A, consult factory for lead time.
Finish - US10B finish has 313 finish device with US10B parts.
* **Wood Doors** - 10WDA cover plate is required for the 370 series controls and will be supplied at an additional **$52 list add**.

Prices subject to change without notice.

Indicates products that have EPD documentation available and meet LEED v4.

3' Devices are priced complete with standard trim and strike(s).
4' add $18 list.
Cylinders and sex bolts are not included in price unless noted.

EXIT HARDWARE

Mortise Lock Devices

(Prices includes 575 Strike)

	US26D	US28	US32D	313	US10	US4/4A	US3/3A US26 643E	US15	315	US10B	Weight lbs. 3'	Weight lbs. 4'	Standard Trim/Control
98/9975EO	1974	1800	2020	1865	2031	2031	2262	2241	2588	2139	15	18	–
98/9975HL	2179	2005	2225	2078	2244	2244	2475	2662	2793	2644	18	20	–
98/9975DT	2228	2054	2274	2138	2304	2236	2546	2525	2861	2412	19	21	990DT
98/9975NL	2247	2073	2293	2146	2315	2253	2553	2532	2869	2420	19	21	990NL-M
98/9975TP	2338	2164	2384	2240	2393	2332	2654	2633	2963	2514	18	20	990TP-M
98/9975TP-BE	2338	2164	2384	2240	2393	2332	2654	2633	2963	2514	18	20	990TP-BE-M
98/9975K	2411	2237	2457	2325	2553	2414	2821	2800	3048	2599	21	22	996K-M
98/9975K-BE	2411	2237	2457	2325	2553	2414	2821	2800	3048	2599	21	22	996K-BE-M
98/9975K-DT	2400	2226	2446	2309	2537	2406	2799	2778	3032	2583	21	22	996K-DT-M
98/9975K-NL	2400	2226	2446	2309	2537	2406	2799	2778	3032	2583	21	22	996K-NL-M
98/9975L	2563	2389	2609	2470	2646	2584	2949	2928	3193	2744	21	23	996L-M
98/9975L-BE	2563	2389	2609	2470	2646	2584	2949	2928	3193	2744	21	23	996L-BE-M
98/9975L-DT	2432	2258	2478	2339	2558	2481	2811	2790	3062	2613	21	23	996L-DT-M
98/9975L-NL	2432	2258	2478	2339	2558	2481	2811	2790	3062	2613	21	23	996L-NL-M

FIRE EXIT HARDWARE

Mortise Lock Devices

(Prices includes 575 Strike)

98/9975EO-F	2169	2018	2245	2101	2246	2246	2478	2457	2809	2431	15	19	–
98/9975DT-F	2423	2272	2499	2374	2519	2451	2762	2741	3082	2704	17	20	990DT
98/9975HL-F	2374	2223	2450	2314	2459	2459	2691	2446	3014	2352	17	20	–
98/9975NL-F	2442	2291	2518	2382	2530	2468	2769	2748	3090	2712	18	21	990NL-M
98/9975TP-F	2533	2382	2609	2476	2608	2547	2870	2849	3184	2806	19	21	990TP-M
98/9975TP-BE-F	2533	2382	2609	2476	2608	2547	2870	2849	3184	2806	19	21	990TP-BE-M
98/9975K-F	2606	2455	2682	2561	2768	2629	3037	3016	3269	2891	20	23	996K-M
98/9975K-BE-F	2606	2455	2682	2561	2768	2629	3037	3016	3269	2891	20	23	996K-BE-M
98/9975K-NL-F	2595	2444	2671	2545	2752	2621	3015	2994	3253	2875	20	23	996K-NL-M
98/9975L-F	2758	2607	2834	2706	2861	2799	3165	3144	3414	3036	20	23	996L-M
98/9975L-BE-F	2758	2607	2834	2706	2861	2799	3165	3144	3414	3036	20	23	996L-BE-M
98/9975L-NL-F	2627	2476	2703	2575	2773	2696	3027	3006	3283	2905	20	23	996L-NL-M

98/9975 Notes:

Finish - US32D and US15 finishes available on Series 98 only.
Finish - US3A, US4A, consult factory for lead time.
Finish - US10B finish has 313 finish device with US10B parts.

Prices subject to change without notice.

Indicates products that have EPD documentation available and meet LEED v4.

3' Devices are priced complete with standard trim and strike(s).
2' add $75 list , 4' add $18 list.
Cylinders and sex bolts are not included in price unless noted.
For Concealed Vertical Cable Devices prices shown are for Door Opening Heights 6'0" to 10'0"

EXIT HARDWARE

Concealed Vertical Cable Devices

(Price includes 249 and 349 Strikes)

	US26D	US28	US32D	313	US10	US4/4A	US3/3A US15 US26 643E	315	US10B	Weight lbs. 2'	3'	4'	Standard Trim
98/9949EO	2139	1898	2186	2054	2145	2222	2343	2779	2531	15	17	19	–
98/9949DT	2393	2152	2440	2327	2418	2427	2627	3052	2804	15	19	23	990DT
98/9949NL	2412	2171	2459	2335	2429	2444	2634	3060	2812	15	19	23	990NL-R/V
98/9949NL-OP	2268	2027	2315	2183	2274	2343	2474	2910	2660	15	19	23	110MD
98/9949TP	2503	2262	2550	2429	2507	2523	2735	3154	2906	16	19	22	990TP-R/V
98/9949TP-BE	2503	2262	2550	2429	2507	2523	2735	3154	2906	16	19	22	990TP-BE-R/V
98/9949K	2576	2335	2623	2514	2667	2605	2902	3239	2991	21	23	25	996K-R/V
98/9949K-BE	2576	2335	2623	2514	2667	2605	2902	3239	2991	21	23	25	996K-BE-R/V
98/9949K-DT	2565	2324	2612	2498	2651	2597	2880	3223	2975	21	23	25	996K-DT-R/V
98/9949K-NL	2565	2324	2612	2498	2651	2597	2880	3223	2975	21	23	25	996K-NL-R/V
98/9949L	2728	2487	2775	2659	2760	2775	3030	3384	3136	21	23	25	996L-R/V
98/9949L-BE	2728	2487	2775	2659	2760	2775	3030	3384	3136	21	23	25	996L-BE-R/V
98/9949L-DT	2597	2356	2644	2528	2672	2672	2892	3253	3005	21	23	25	996L-DT-R/V
98/9949L-NL	2597	2356	2644	2528	2672	2672	2892	3253	3005	21	23	25	996L-NL-R/V

FIRE EXIT HARDWARE

Concealed Vertical Cable Devices

(Price includes 249 and 349 Strikes)

98/9949EO-F	2315	2074	2362	2230	2321	2398	2519	2955	2707	15	17	19	–
98/9949DT-F	2569	2328	2616	2503	2594	2603	2803	3228	2980	15	19	23	990DT
98/9949NL-F	2588	2347	2635	2511	2605	2620	2810	3236	2988	15	19	23	990NL-R/V
98/9949NL-OP-F	2444	2203	2491	2359	2450	2519	2650	3086	2836	15	19	23	110MD
98/9949TP-F	2679	2438	2726	2605	2683	2699	2911	3330	3082	16	19	22	990TP-R/V
98/9949TP-BE-F	2679	2438	2726	2605	2683	2699	2911	3330	3082	16	19	22	990TP-BE-R/V
98/9949K-F	2752	2511	2799	2690	2843	2781	3078	3415	3167	21	23	25	996K-R/V
98/9949K-BE-F	2752	2511	2799	2690	2843	2781	3078	3415	3167	21	23	25	996K-BE-R/V
98/9949K-NL-F	2741	2500	2788	2674	2827	2773	3056	3399	3151	21	23	25	996K-NL-R/V
98/9949L-F	2904	2663	2951	2835	2936	2951	3206	3560	3312	21	23	25	996L-R/V
98/9949L-BE-F	2904	2663	2951	2835	2936	2951	3206	3560	3312	21	23	25	996L-BE-R/V
98/9949L-NL-F	2773	2532	2820	2704	2848	2848	3068	3429	3181	21	23	25	996L-NL-R/V

98/9949 Notes:

Finish - US32D and US15 finishes available on Series 98 only.
Finish - US3A, US4A, consult factory for lead time.
Finish - US10B finish has 313 finish device with US10B parts.
Door Opening Height - Specify door opening height if other than default.
For door opening heights more than 10', consult factory.

For Concealed Vertical Cable Devices - Less Cable System (LCS) Deduct $967 LIST

Nominal Door Opening Height		Top Cable	Bottom Cable
72"-82"	6' - 6'10'	47250398	47250403
*>82"-96"	*6'10' - 8'	47250175	47250178
>96" - 110"	>8' - 9'2"	47250176	47250179
>110" - 120"	>9'2" - 10'	47250177	47250180

*Default door opening height

Prices subject to change without notice. Indicates products that have EPD documentation available and meet LEED v4.

3' Devices are priced complete with standard trim and strike(s).
2' add $75 list, 4' add $18 list.
Cylinders are not included in price unless noted.

EXIT HARDWARE

Wood Door Concealed Vertical Cable Devices

(Price includes 150 and 450 Strikes, Sex Bolts and Scalp Plate)

	US26D	US28	US32D	313	US10	US4/4A	US3/3A US15 US26 643E	315	US10B	Weight lbs. 2'	3'	4'	Standard Trim/ Control
98/9950WDC-EO	2270	2035	2325	2203	2289	2369	2544	2903	2715	15	17	19	—
98/9950WDC-DT	2524	2289	2579	2476	2562	2574	2828	3176	2988	15	19	23	990DT
98/9950WDC-NL	2543	2308	2598	2484	2573	2591	2835	3184	2996	15	19	23	990NL-R&V
98/9950WDC-NL-OP	2399	2164	2454	2332	2418	2490	2675	3034	2844	15	19	23	110WD
98/9950WDC-TP	2634	2399	2689	2578	2651	2670	2936	3278	3090	16	19	22	990TP-R&V
98/9950WDC-TP-BE	2634	2399	2689	2578	2651	2670	2936	3278	3090	16	19	22	990TP-BE-R&V
98/9950WDC-K	2707	2472	2762	2663	2811	2752	3103	3363	3175	17	21	25	996K-R&V
98/9950WDC-K-BE	2707	2472	2762	2663	2811	2752	3103	3363	3175	17	21	25	996K-BE-R&V
98/9950WDC-K-DT	2696	2461	2751	2647	2795	2744	3081	3347	3159	17	21	25	996K-DT-R&V
98/9950WDC-K-NL	2696	2461	2751	2647	2795	2744	3081	3347	3159	17	21	25	996K-NL-R&V
98/9950WDC-L	2859	2624	2914	2808	2904	2922	3231	3508	3320	21	23	25	996L-R&V
98/9950WDC-L-BE	2859	2624	2914	2808	2904	2922	3231	3508	3320	21	23	25	996L-BE-R&V
98/9950WDC-L-DT	2728	2493	2783	2677	2816	2819	3093	3377	3189	21	23	25	996L-DT-R&V
98/9950WDC-L-NL	2728	2493	2783	2677	2816	2819	3093	3377	3189	21	23	25	996L-NL-R&V

For Devices Less Cable System (LCS) Deduct $1107 List

FIRE EXIT HARDWARE

Wood Door Concealed Vertical Cable Devices

(Price includes 150 and 450 Strikes, Sex Bolts and Scalp Plate)

98/9950WDC-EO-F	2570	2335	2625	2503	2589	2669	2844	3203	3015	15	17	19	—
98/9950WDC-DT-F	2824	2589	2879	2776	2862	2874	3128	3476	3288	15	19	23	990DT
98/9950WDC-NL-F	2843	2608	2898	2784	2873	2891	3135	3484	3296	15	19	23	990NL-R&V
98/9950WDC-NL-OP-F	2699	2464	2754	2632	2718	2790	2975	3334	3144	15	19	23	110WD
98/9950WDC-TP-BE-F	2934	2699	2989	2878	2951	2970	3236	3578	3390	16	19	22	990TP-R&V
98/9950WDC-TP-F	2934	2699	2989	2878	2951	2970	3236	3578	3390	16	19	22	990TP-BE-R&V
98/9950WDC-K-F	3007	2772	3062	2963	3111	3052	3403	3663	3475	17	21	25	996K-R&V
98/9950WDC-K-BE-F	3007	2772	3062	2963	3111	3052	3403	3663	3475	17	21	25	996K-BE-R&V
98/9950WDC-K-NL-F	2996	2761	3051	2947	3095	3044	3381	3647	3459	17	21	25	996K-NL-R&V
98/9950WDC-L-F	3159	2924	3214	3108	3204	3222	3531	3808	3620	21	23	25	996L-R&V
98/9950WDC-L-BE-F	3159	2924	3214	3108	3204	3222	3531	3808	3620	21	23	25	996L-BE-R&V
98/9950WDC-L-NL-F	3028	2793	3083	2977	3116	3119	3393	3677	3489	21	23	25	996L-NL-R&V

For Devices - Less Cable System (LCS) Deduct $1407 List

98/9950WDC Notes:

Finish - US32D and US15 finishes available on Series 98 only.
Finish - US3A, US4A, consult factory for lead time.
Finish - US10B finish has 313 finish device with US10B parts.
Door Opening Height - must be specified when placing an order. Other heights over 10' are available, consult factory for lead time.
Non-Standard Center Lines or Threshold installed - consult customer support.

Standard Door Opening Height Range	Top Cable	Bottom Cable
6'8" - 7'0"	24648180	24647265
7'1" - 8'0"	24647273	24647265
8'1" - 9'0"	24647281	24647265
9'1" - 10'0"	24647299	24647265

Prices subject to change without notice.

Indicates products that have EPD documentation available and meet LEED v4.

Accessible Device

Prefix		List Add
AX	Accessible device compliant with the California Building Code (Section 11B-309.4) requirement for 5 lb. maximum operation force. Available on AX98/99, AX98/99-F Rim, AX98/9949 LBL, LBL-AFL, AX98/9927-LBR, AX98/9927-LBR-F, 98/9950WDC-LBL, 98/9950WDC-LBL-F. Trim functions available EO, DT, NL, L, LBE, LDT and LNL. EL option available. Not available with QEL or CX	62

Cylinder Dogging

Not for use with Fire Exit Hardware

Prefix		List Add
CD	Standard Baseplate Cylinder dogging available on all 98/99 Series Panic Devices excluding the 2' device.	97
CD-CX	Center case dogging available on all Chexit 98/99 Rim/27/47/48/49/57 Panic Devices. Specify handing.	441
CI	Cylinder Dogging Indicator available on all 98/99 Series Panic Devices Not available with EL/QEL electrical option, Chexit device or the 2' device.	266
DI	Dogging indicator available on all 98/99 Series Panic Devices excluding the 2' device.	250
LD	Less Dogging available on all 98/99 Series Panic Devices.	N/C
CDSI	Cylinder Dogging w/ Indicator	319
HDSI	Hex Dogging w/ Indicator	230
SD	Special center case dogging available on 98/99 Rim/27/57/47/48/49/50WDC Panic Devices ONLY. Can be used with the "EL and QEL" option. Refer to page 69 for pricing. **Specify handing.**	408

Double Cylinder

Suffix		List Add
-2	98/99 Rim	333
	98/9975 Mortise Device (includes 7500-2 lock) Double Cylinder application available with TP, TP-BE, K, K-BE, L, & L-BE functions only. **Specify handing.**	535
-2SI	Double Cylinder with Security Indicator available on 98/99 Rim only. Rim cylinder sold separately. Cylinder with T-Turn available from Schlage, order part # XB 11-979 Double Cylinder application with Security Indicator available with TP, TP-BE, K, K-BE, L, & L-BE functions only. Specify handing.	557
971220-00	Lock/Unlock label only, order part number 971220-00.	10

Hurricane Device

Hurricane devices are listed with Steelcraft doors. Contact factory for specific requirements.
List add prices are for the strike price adjustment only. Mullions are priced separately on page 99.

Prefix		List Add
HH	Available on the following 98/99 Series Panic Devices:	
	98/99 Rim x 9954 Mullion w/299-F (order mullion as "blank")	16
	98/9957 w/299-F Strike	32
	98/9927 w/299-F Strike	16
	98/9975 Device with Standard Strike	NC
	98/9947-F Device with Standard Strikes	NC
	98/9949 Device with Standard Strikes	NC
	Less trim requires sexbolts	72

Windstorm Devices

Windstorm devices are certified to comply with ICC 500 Standard for the Design and Construction of Storm Shelters, and the Federal Emergency Management Agency's publication FEMA 361 — Design and Construction Guidance for Community Safety.
Windstorm devices are listed with Steelcraft Paladin doors for tornado listings and Steelcraft "H" Series doors for Hurricane listings.

Prefix		List Add
WS	Available on the 98/9927/57 Series Devices - Specify Handing (Not available with EL option and LNL/NL trim function) QEL is available. **For Replacement Parts, contact Customer Care 877-671-7011**	1310

Door Applications For WS98/9927 - 8'0" x 8'0" Pairs (swing same direction) 4'0" x 8'0" Single (non-fire rated only) Flush Hollow Metal. UL - FEMA 361 certified.
For WS98/9957 - 4'0" x 8'0" Single (fire and non-fire rated) Flush Hollow Metal. UL-FEMA 361 certified.
Miami-Dade Co. / FBC will list compliance to: TAS 201, TAS 202, TAS 203.
Design Load Rating: +150/-150 PSF (245 MPH Wind Zone)
Enhanced Hurricane Protection (EHPA) ASTM E1996 / ANSI/ICC 500 (245 MPH Wind Zone) / UL - ANSI/ICC 500 certified of F5 - Tornado applications.

Prices subject to change without notice. Indicates products that have EPD documentation available and meet LEED v4.

Insulclad or Applied Panel

Not available for fire door applications

Suffix		List Add
INS-2	1/2" Panel - for 98/9947 devices.	67
INS-4	1/4" Panel - for 98/9947 devices.	67
INS-2	1/2" Panel - for 98/9949 devices.	67
INS-4	1/4" Panel - for 98/9949 devices.	67
Suffix		**List Price**
INS-2 KIT-9947	1/2" Panel Kit - for 98/9947 devices - order part number 051841-00	261
INS-4 KIT-9947	1/4" Panel Kit - for 98/9947 devices - order part number 051842-00	158
INS-2 KIT-9949	1/2" Panel Kit - for 98/9949 devices - order part number 24122285	67
INS-4 KIT-9949	1/4" Panel Kit - for 98/9949 devices - order part number 24122327	261

Less Bottom Rod/Less Bottom Latch

Suffix			
LBR	Less bottom rod with UL Fire Label 98/9927-F, 98/9947-F and 98/9947WDC-F Devices. LBR fire-rated devices must be ordered in pairs of vertical rod devices.		NC
			Deduct
	Less bottom rod, Panic 98/9927		116
	Less bottom rod, Panic 98/9947, 98/9947WDC		124
			List Price
LBR KIT	Fire Latch Kit, complete auxiliary bolt field replacement kit. Order part number 050171-32		459
LBL	Less bottom latch available on 98/9949A and 98/9950WDC (Panic)	**LBL Only**	**Deduct** 124
	98/9949-F LBL and 98/9950WDC-F-LBL devices must be ordered in pairs of vertical latch devices with one Fire Pin Kit per pair: First Leaf - 98/9949-F LBL and 98/9950WDC-F-LB LBL Only	**LBL Only**	**Deduct** 124
	Second Leaf - 98/9949-F LBL and 98/9950WDC-F-LBL LBL Only with Fire Pin Kit		**Add** 27
			List Price
49 Fire Pin Kit	49 Fire Pin Kit, complete auxiliary bolt field replacement kit. Order part number 051860-32		151

Pullman Latches

Not available for fire door applications

Prefix		List Add
PL	98/9927 Device PL Top and PL Bottom 98/9947 Device PL Top and PL Bottom	246 348
ES	98/9927 Panic Device LBR with PL top Latch for electric strike application. 98/9947 Panic Device LBR with PL top Latch for electric strike application. **CAUTION: A Panic LBR device is only a one point latching instead of two point.** **Security of the opening may be compromised.**	123 174

Touchbar Options

Suffix		List Add
BRAILLE	Vision Impaired Touchpad, Raised Letters and Braille (US32D) Standard copy "Caution Stairwell." Other copy up to 20 alpha/numeric characters, one line, available, consult factory. **Specify handing.**	125
PUSH	Brass, Bronze and Stainless Touchbar trims embossed "PUSH." No additional charge when specified with device. **Specify handing.**	NC
RSS	Red silk-screened lettered Touchbar trims (as standard on SS devices). "Emergency Exit Only, Push to Open and Sound Alarm" No additional charge when specified with device. **Specify handing.**	NC
KN	Knurled Touchpad No additional charge when specified with device.	NC
SG	Safety Glow feature - for 3' device Safety Glow feature - for 4' device	455 474

CUSTOM GRAPHICS available on pushbar trim. See page 8 for details.

Prices subject to change without notice.

Indicates products that have EPD documentation available and meet LEED v4.

Weep Holes

Suffix		List Add
WH	Drainage (Weep) Holes in Mechanism Case 3' device will have 4 holes - 6" spacing, 4' device will have 6 holes - 6" spacing	89

49 Cable System

(Device Type and Door Opening Height must be specified when ordering)

Prefix	Suffix			List Price
CS		**Complete Cable System -** Includes: Top and Bottom Strikes, Latches, Centerslides, Cables and Mounting Packs	Door Opening Heights - 6'0" to 10'0"	967
CS	LBL	**Cable System - Less Bottom Latch** Includes: Top Strike, Top Latch, Top Cable, Centerslides, Mounting Packs	Door Opening Heights - 6'0" to 10'0"	843
CS	LBL - 49AFL	**Cable System - Less Bottom Latch - with Fire Pin Kit** Includes: Top Strike, Top Latch, Top Cable, Centerslides, Mounting Packs and Fire Pin Kit	Door Opening Heights - 6'0" to 10'0"	994

50 WDC Cable System

(Door Type, Door Height, and Finish must be specified when ordering)

Prefix	Suffix		List Price
CS		**Complete Cable System** Includes: Top and Bottom Latches, Strikes, Cables, Centerslide, Mounting Packs	1107
CS	F	**Fire-Rated Complete Cable System** Includes: Top and Bottom Latches, Strikes, Cables, Centerslide, Mounting Packs, Fire kit	1407
CS	LBL	**Cable System - Less Bottom Latch** Includes: Top Latch, Strike,Cable, Centerslide, Mounting Packs	983
CS	LBL-F	**Fire-Rated Cable System - Less Bottom Latch** Includes: Top Latch, Strike, Cable, Centerslide, Mounting Packs, Fire kit, Fire Pin kit	1434

Anti-Microbial Finish

Suffix		List Add
AM	Antimicrobial Coating available in US26D and US32D, use suffix-AM when ordering. Example US26D-AM	
	For Device with or without Trim	68
	For Trim Only (US26D-AM)	32

Door Thickness >2-1/4" - 4 1/4"

Suffix		List Add
Door Thickness > 2-1/4" - <= 4 1/4"	98/99 Rim, 98/9947/47WDC, 98/9948, 98/9949, 98/9950WDC devices EO (exit only no trim) with sex bolts.	89
	98/99 Rim, 98/9947/47WDC, 98/9948, 98/9949, 98/9950WDC devices NL-OP (with 110NL cylinder control) with sex bolts.	178
	98/99 Rim, 98/9947/47WDC, 98/9948, 98/9949, 98/9950WDC devices NL-OP (with 110NL cylinder control) NO sex bolts.	89
	98/9927, 98/9957 devices EO (exit only no trim).	89
	98/9927, 98/9957 devices NL-OP (with 110NL cylinder control)	178

Von Duprin Remote Undogging and Remote Monitoring Kit

- Modular Retrofit Kit for 98/99 and 33A/35A Series Devices
- Access control managed via an IP or RSI/ RS-485 connection to the gateway through Allegion software alliance members.

** Please note, ENGAGE cloud based management not available.**

- Consult your access control software provider for pricing and specific scope of support.

For details regarding the configurations that are available, please see page 266 of the Schlage Electronics Price Book.

Prices subject to change without notice. Indicates products that have EPD documentation available and meet LEED v4.

Pneumatic Devices

Prefix			List Add
PN	Pneumatic		1414
Accessories		**Order Part Number**	**Each Price**
PNT-1	Pneumatic Power Transfer	012014-36	619
PN Connector	Pneumatic Connector	051827-00	38
PN Tubing	25' length	051828-00	25
	50' length	051823-00	33
	100' length	051824-00	56
	200' length	051825-00	106

Electric Latch Retraction

See 98/99 Product Catalog for required accessory equipment

Device Prefix	Description	List Add
EL	Electric Latch Retraction	921
HD-EL	Electric Latch Retraction with Hex Dogging (Panic Only)	921
SD-EL	Electric Latch Retraction with Special Center Case Dogging, available with "EL" option on 98/99 Rim/27/57/47/48/49/50 panic devices. SPECIFY HANDING	1329
QEL	Quiet Electric Latch Retraction	914
HD-QEL	Quiet Electric Latch Retraction with Hex Dogging (Panic Only)	914
SD-QEL	Quiet Electric Latch Retraction with Special Center Case Dogging, available with "QEL" option on 98/99 Rim/27/57/47/48/49/50 panic devices. SPECIFY HANDING	1322

EL Conversion Kits

(Field Conversion Kits for Electric Latch Retraction)

	Standard		Allegion Connect -CON		
	3' device	**4' device**	**3' device**	**4' device**	**List Price**
EL Baseplate Conversion Kit	050070	050078	050853	050854	1074
HD-EL Baseplate Conversion Kit (Hex Dogging included - Panic Only)	050384	050385	050855	050856	1074

QEL Conversion Kits

(Field Conversion Kits for Quiet Electric Latch Retraction)

Baseplate Conversion Kits (May be used for ANY conversion application)					
QEL Baseplate Conversion Kit	958003	040065	040063	040066	960
HD-QEL Baseplate Conversion Kit (Hex Dogging included - Panic Only)	958004	040067	040064	040068	960
Modular Conversion Kits (For Panic Devices, for Fire-rated Devices sold after October 2014, or for replacing existing motor)					
QEL Modular Conversion Kit	114317	114317	040061	040061	914
HD-QEL Modular Conversion Kit (Hex Dogging included - Panic Only)	958002	958002	040062	040062	914

Exit Alarm

Suffix		List Add
ALK	Exit Alarm available on 98/99 series Panic and Fire Devices. Price includes switch - "RX" switch, "LX" is optional at no additional charge. For vertical rod tampering monitoring on Surface Vertical Devices, specify device with LX (Latch Bolt Monitor Switch). To order Less Switch, **Deduct $249** list. 9 volt battery included.	617

Switches

Prefix		List Add
RX	Request to Exit - available on all 98/99 Series Devices	249
RX-LC	Request to Exit Low Current - available on all 98/99 Series Devices	288
RX-2	Request to Exit Double Switch - available on all 98/99 Series Devices	309
RX-AUX	RX to RX-2 Conversion - Order part number 050271	258
WP-RX	Waterproof Request to Exit - available on all 98/99 Series Devices	358
* **LX**	Latchbolt Monitoring - available on all 98/99 Series Devices.	249
* **LX-LC**	Latchbolt Monitoring Low Current - available on all 98/99 Series Devices except 98/9975.	288
* **LX-RX**	Request to Exit/Latchbolt Monitoring combination available on all 98/99 Series Devices except 98/9975.	376
* **LX-RX-LC**	Request to Exit/Latchbolt Monitoring combination Low Current available on all 98/99 Series Devices except 98/9975.	450
SS	Signal Switch - for Rim and Vertical Rod Devices -Specify Handing.	509
	Signal Switch - for Mortise Device (includes SS7500 lock) - Specify Handing.	758

* For Latchbolt monitoring on **98/9975 Mortise Devices** specify the SS7500 lock and **add $249 list** per device.
For 98/9949, LX switch monitors trim input or electric dogging of EL/QEL devices. LX switch does not monitor latch condition.
See page 107 for field-installed switch kit part numbers.

Prices subject to change without notice.

Indicates products that have EPD documentation available and meet LEED v4.

Electric Unlocking

Prefix		List Add
E	**Electric Unlocking of outside trim** - for all 98/9975 Mortise Devices. Available with TP, K, or L functions only "AC" current requires 12 or 24VAC-SO rectifier kit. **Add $41 list per device**. Specify FAIL SECURE (FSE) or FAIL SAFE (FS).	617
E996	**Electric Unlocking of outside E996 Trim** - for 98/99 rim, mortise, surface vertical and concealed vertical devices. Available with L or LBE functions only. Specify handing. Available standard in 12 or 24 VDC, Fail Safe (FS) and Fail Secure (FSE). Can also be converted in the field. **See Page 93 for pricing and optional lever designs.**	617
	RETROFIT KITS FOR EXISTING 996L TRIM	
	996 R/V/C Conversion to E Kit — Order part number 050672-00	687
	996 Mort Conversion to E Kit — Order part number 050673-00	714

Chexit

Prefix		List Add
CX	**Chexit – Controlled Exit Device** - available on all 98/99 Series Devices 15 Second Delay furnished standard. DT Function requires an electric strike to access opening. For CX98/9927 and CX98/9957 panic and fire devices, two Rod Guards (RGO) supplied standard. **Add $580 list** per device. For doors over 7' additional RGO's will be added as needed to protect the rods. For each additional RGO, **add $290 List**. For latch protection, latch guards (LGO) found on page 100 can be ordered separately.	1811

Chexit Options:			List Add
	RCM	Remote Chexit Module	259
	*** RCM KIT-98**	Less Module - specify part number 040199 and finish.	259
	*** RCM KIT-99**	Less Module - specify part number 040198 and finish.	259
	0 Delay	0 Second Delay	133
	****30 Delay**	30 Second Delay	133
	BOCA-15 Delay	15 second delay with BOCA Modification	133
	****BOCA-30 Delay**	30 second delay with BOCA Modification	133
	****Other Delays**	2-60 Seconds in 2 second intervals or infinite delay	178

* 15 second Module sold separately. Specify part number **040086**.
**** Over 15 second delay requires a letter of approval from the authority having local jurisdiction over the premises prior to the installation of the device. Allegion cannot grant such approval nor does it warrant local jurisdiction compliance.**
Chexit is not available with any electrical options (EL, QEL, PN).
Chexit is not available with any switches (RX, RXLC, RX2, WP-RX, LX, LXLC, LXRX, LXRXLC, SS)

Connectors

Suffix		List Add
CON	Cross-category solution using common interconnect components for electrified options. **Available with ALK, LX, LXLC, LXRX, LXRXLC, RX and RXLC switches, EL, QEL, CX, E996, E7500, SS7500**	N/C

Quiet Mechanical

Prefix		List Add
QM	Controls motion to reduce operational noise. The QM device option provides damper-controlled re-latching. Available on 98/99 rim and 98/9927 devices. Compatible with most of the device options including QEL, EL, AX, RX, and CD. Not available with CX and LX.	185

Prices subject to change without notice. Indicates products that have EPD documentation available and meet LEED v4.

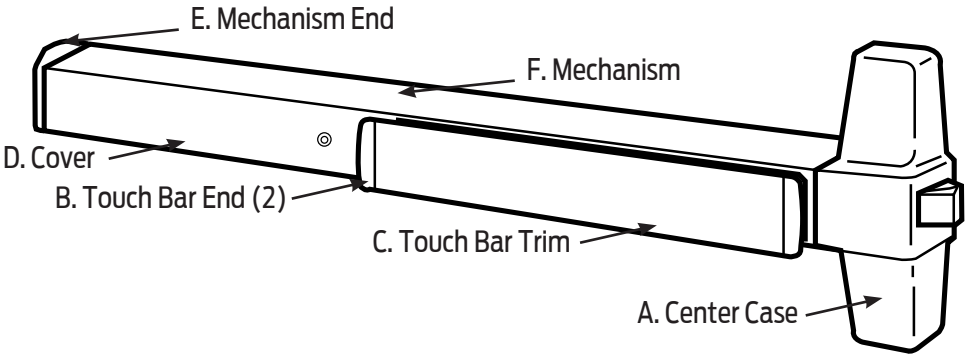

Standard Finishes

Color	US Number	BHMA Number	A, B, E	C -Touch Bar Trim Finishes	D, F
Bright Brass	US3	605	Bright Brass	Bright Brass US3, 605	Buffed Anodized
Satin Brass	US4	606	Satin Brass	Satin Brass US4, 606	Anodized
Satin Bronze	US10	612	Plated/Anodized	Satin Bronze US10, 725	Anodized
Satin Nickel	US15	619	Plated, Clear Powder Coat	Satin Stainless Steel US32D, 630	Anodized
Polished Chrome	US26	625	Plated	Bright Stainless Steel US32, 629	Buffed Anodized
Satin Chrome	US26D	626	Powder Coat	Satin Stainless Steel US32D, 630	Anodized
Anodized Aluminum	US28	628	Powder Coat	Satin Stainless Steel US32D, 630	Anodized
Satin Stainless Steel	US32D	630	Stainless Steel	Satin Stainless Steel US32D, 630	Anodized
Duranodic Dark Bronze	313	710	Powder Coat	Powder Coat 313, 710	Powder Coat
Black	315	711	Powder Coat	Powder Coat 315, 711	Powder Coat

US15 and US32D available on XP98 Series only.

Special Finishes

Color	US Number	BHMA Number	A, B, E	C -Touch Bar Trim Finishes	D, F
Bright Bronze	US9	611	Plated	Bright Bronze US9, 611	Buffed Anodized
Satin Bronze, Oil-Rubbed	US10B	613	Oil-Rubbed	Oil-Rubbed, US10B	Powder Coat
Satin Chrome, Antimicrobial	US26D-AM	626-AM	AM Clear over Chrome	AM Clear over Satin Stainless Steel US32D, 630	AM Clear over Anodized
Satin Stainless Steel, Antimicrobial	US32D-AM	630-AM	AM Clear over Stainless Steel	AM Clear over Satin Stainless Steel US32D, 630	AM Clear over Anodized
Powder Coat	RAL # *	--	Powder Coat	Satin Stainless Steel US32D, 630 (unless specified to match device)	Powder Coat

* See Finish page for optional RAL color information.

FINISH NOTES:
US15, US32D, US32D-AM available on XP98 Series only.

XP98 / XP99 Series Sex Bolt Quantities

Application	425 Sex Bolt (Optional)	825 Sex Bolt (Supplied)
DT, EO, NL, TP, K or L Device with trim	2	
99 NLOP Device with 110MD/WD	6	
99 EO Device (exit device only)	6	
99-F Wood Door with trim		2

Prices subject to change without notice.

Indicates products that have EPD documentation available and meet LEED v4.

XP98/XP99 Series • Summary

Type of Device

Rim

Function

EO (Exit Only)	**DT** (Dummy Trim)	**L** (Lever-06 Standard)	**LBE** (Lever-Blank Escutcheon)
NL (Night Latch-Key Retracts)	**NLOP** (Night Latch, Opt. Pull)	**LDT** (Lever-Dummy Trim)	**LNL** (Lever-Night Latch)
TP (Thumbpiece)	**TPBE** (Thumbpiece - Blank Escutcheon)	**K** (Knob)	**KBE** (Knob Blank Escutcheon)
		KDT (Knob Dummy)	**KNL** (Knob Night Latch)

Rating

None (Panic Exit Device) **- F** (Fire Exit Device)

Device Finish

US3 (Bright Brass)	**US4** (Satin Brass)	**US9** (Bright Bronze)	**US10** (Satin Bronze)
US10B (Satin Bronze-Oil Rubbed)	**US26** (Bright Chrome)	**US26D** (Satin Chrome)	**US26D-AM** (Antimicrobial)
US28 (Anodized Aluminum)	**313** (Duranodic Dark Bronze)	**315** (Black)	**643E** (Aged Bronze)
US32D / US32D-AM (Satin Stainless Steel) & **US15** (Satin Nickel) XP98 Series only			**US10B** (Satin Bronze- Oil Rubbed)

Device Length (Feet and Inches)

3' (3' Device for 2' 4" - 3' Door) **4'** (4' Device for 2' 10" - 4' Door)

Device Handing

RHR (Right Hand Reverse) **LHR** (Left Hand Reverse)

Touch Bar Trim Options

RSS (Emergency Exit- US32D only)	**EMB** (Embossed - Push)	**BR** (Braille - US32D only)	**KN** (Knurled)
SG (Safety Glow)			

Touch Bar Finish

US3 (Bright Brass)	**US4** (Satin Brass)	**US10** (Satin Bronze)	**US19** (Flat Black)
US32 (Bright Stainless)	**US32D-AM** (Antimicrobial)	**US32D** (Satin Stainless)	**313** (Duranodic Dark Bronze)
US10B (Satin Bronze-Oil Rubbed)			

Dogging Options

CD (Cylinder Dogging - Panic Only)	**DI** (Dogging Indicator)	**CI** (Cylinder Dogging Indicator)	
LD (Less Dogging Kit)	**HDSI** (Hex Dogging w/Indicator)	**CDSI** (Cylinder Dogging w/Indicator)	**SD** (Center Case Dogging)

Switch Options

RX (Request to Exit)	**RXLC** (RX Low Current)	**RX2** (RX Double Switch)	**WP-RX** (Waterproof RX)
LXLC (LBM Low Current)	**LXRXLC** (LBM RX Low Current)		

Electric Options

EL (Electric Latch Retraction) **QEL** (Quiet Electric Latch Retraction)

Prices subject to change without notice.

Indicates products that have EPD documentation available and meet LEED v4.

Device Options

AX (Accessible Device)	**ALK** (Exit Alarm)	**CX** (Chexit - Controlled Exit)	**CX-RCM** (Chexit - Remote Module)
-2 (Double Cylinder)	**CON** (Connectors)	**CYL** (Include Cylinder	**GBK** (Include Glass Bead Kit)
SEC (Include Security Screws)	**SLM** (Include SLM Blocking)	**SNB** (Include Sexbolts)	
WH (Drainage/Weep Holes in Mechanism Case - 3' device will have 4 holes - 6" spacing, 4' device will have 6 holes - 6" spacing)			

CHEXIT Options

15 (15 Second Delay)	**B15** (BOCA 15 Second Delay)	**M15** (15 Second Mute Delay)	**0** (0 Second Delay)
30 (30 Second Delay)	**B30** (BOCA 30 Second Delay)	**INF** (Infinite Delay)	**2-60 Seconds** (2 second intervals)

Strike Series

LS (Less Strike)	**909** (Std. Panic & Fire)	**954** (Opt. Mullion)

Strike Finish

US19 (Flat Black)

Trim Options

LT (Less Trim)	**996** (Std. Lever Trim)	**VR910** (Vandal Resistant)	**110MD / 110WD** (Std. on NL-OP)
392-7 (Opt. Pull Dummy Trim)	**990** (Std. Rim)	**E996** (Electric 996)	**696 / 696WDF** (Opt. Lever Trim)
697 / 697WDF (Opt. Lever Trim)			

Trim Finish

US3 (Bright Brass)	**US4** (Satin Brass)	**US10** (Satin Bronze)	**US10B** (Satin Bronze-Oil Rubbed)
US26 (Bright Chrome)	**US26D** (Satin Chrome)	**SPBLK** (Black Painted)	**313** (Duranodic Dark Bronze)
US15 (Satin Nickel)			

Trim Lever Styles 06 Lever Standard

ACC (Accent Lever)	**AST** (Asti Lever)	**MER** (Merona Lever)	
03K (03 Knurled Lever)	**06K** (06 Knurled Lever)	**01, 02, 03, 05, 06, 07, 12, 16, 17, 18** (Levers)	
03 SS, 06 SS, 17 SS, Latitude SS, Longitude SS, M57, M62 (Stainless Steel Levers)		**LAT** (Latitude)	**LON** (Longitude)
M51, M52, M53, M54, M55, M56, M61, M63, M81, M82, M83, M84, M85, ME1, ME2, ME3			

Door Material

AL (Aluminum Door)	**HM** (Hollow Metal)	**WD** (Wood Door)	**CP** (Composite Door)

Door Thickness

1.3/4 (1-3/4" Standard)	**2** (2" Thickness)	**2.1/4** (2-1/4" Thickness)

Door Application

	P (Pair of Doors with Mullion)	**S** (Single Door)

Prices subject to change without notice.

Indicates products that have EPD documentation available and meet LEED v4.

XP98/XP99 Series • Devices

3' Devices are priced complete with standard trim and strike(s),
4' add $18 list.
Cylinders and sex bolts are not included in price unless noted.

EXIT HARDWARE

Rim Devices

(Prices includes 909 Strike)

	US26D	US28	US32D	313	US10	US4/4A	US3/3A US15 US26 643E	315	US10B	Wt. lbs. 3'	Wt. lbs. 4'	Standard Trim/Control
XP98/99EO	1552	1376	1576	1442	1572	1594	1805	2211	1768	14	17	–
XP98/99DT	1806	1630	1830	1715	1845	1799	2089	2484	2041	17	19	990DT
XP98/99NL	1825	1649	1849	1723	1856	1816	2096	2492	2049	17	19	990NL-R&V
XP98/99NL-OP	1681	1505	1705	1571	1701	1715	1936	2342	1897	15	18	110MD/WD
XP98/99TP	1916	1740	1940	1817	1934	1895	2197	2586	2143	16	20	990TP-R&V
XP98/99TP-BE	1916	1740	1940	1817	1934	1895	2197	2586	2143	16	20	990TP-BE-R&V
XP98/99K	1989	1813	2013	1902	2094	1977	2364	2671	2228	18	21	996K-R&V
XP98/99K-BE	1989	1813	2013	1902	2094	1977	2364	2671	2228	18	21	996K-BE-R&V
XP98/99K-DT	1978	1802	2002	1886	2078	1969	2342	2655	2212	18	21	996K-DT-R&V
XP98/99K-NL	1978	1802	2002	1886	2078	1969	2342	2655	2212	18	21	996K-NL-R&V
XP98/99L	2141	1965	2165	2047	2187	2147	2492	2816	2373	19	21	996L-R&V
XP98/99L-BE	2141	1965	2165	2047	2187	2147	2492	2816	2373	18	21	996L-BE-R&V
XP98/99L-DT	2010	1834	2034	1916	2099	2044	2354	2685	2242	18	21	996L-DT-R&V
XP98/99L-NL	2010	1834	2034	1916	2099	2044	2354	2685	2242	18	21	996L-NL-R&V

FIRE EXIT HARDWARE

Rim Devices

(Price includes 909 Strike for single door applications.)
(For double door applications, the 954 Strike will be supplied at an additional **$105 list add**.)

XP98/99EO-F	1707	1584	1767	1688	1772	1860	2021	2446	2075	13	16	–
XP98/99DT-F	1961	1838	2021	1961	2045	2065	2305	2719	2348	16	18	990DT
XP98/99NL-F	1980	1857	2040	1969	2056	2082	2312	2727	2356	16	18	990NL-R&V
XP98/99NL-OP-F	1836	1713	1896	1817	1901	1981	2152	2577	2204	14	17	110MD/WD
XP98/99TP-F	2071	1948	2131	2063	2134	2161	2413	2821	2450	17	19	990TP-R&V
XP98/99TP-BE-F	2071	1948	2131	2063	2134	2161	2413	2821	2450	17	19	990TP-BE-R&V
XP98/99K-F	2144	2021	2204	2148	2294	2243	2580	2906	2535	19	20	996K-R&V
XP98/99K-BE-F	2144	2021	2204	2148	2294	2243	2580	2906	2535	19	20	996K-BE-R&V
XP98/99K-NL-F	2133	2010	2193	2132	2278	2235	2558	2890	2519	19	20	996K-NL-R&V
XP98/99L-F	2296	2173	2356	2293	2387	2413	2708	3051	2680	18	20	996L-R&V
XP98/99L-BE-F	2296	2173	2356	2293	2387	2413	2708	3051	2680	18	20	996L-BE-R&V
XP98/99L-NL-F	2165	2042	2225	2162	2299	2310	2570	2920	2549	18	20	996L-NL-R&V

XP98/99 Notes:

Finish - US32D and US15 finishes available on Series 98 only.
Finish - US3A, US4A, consult factory for lead time.
Finish - US10B finish has 313 finish device with US10B parts.

Prices subject to change without notice.

Indicates products that have EPD documentation available and meet LEED v4.

Accessible Device

Prefix		List Add
AX	AX Accessible device compliant with the California Building Code (Section 11B-309.4) requirement for 5 lb. maximum operation force. EL option available.	62

Cylinder Dogging

(Not for use with Fire Exit Hardware)

Prefix		
CD	Standard Baseplate Cylinder dogging available.	97
CI	Cylinder Dogging Indicator. Not available with EL/QEL electrical option.	266
CDSI	Cylinder Dogging Indicator w/Indicator	319
DI	Dogging indicator	250
HDSI	Hex Dogging w/Indicator	230
LD	Less Dogging	N/C
SD	Special center case dogging available on Panic Devices ONLY. Can be used with the "EL" option. Specify handing.	408

Double Cylinder

Prefix		
-2	Double Cylinder Option available for TP, K & L functions on XP98/99 RIM Devices. **Specify handing.**	333
-2SI	Double Cylinder with Security Indicator. Rim cylinder sold separately. Cylinder with T-Turn available from Schlage, order part # XB 11-979 Double cylinder with security indicator available with TP, TP-BE, K, K-BE , L, & L-BE functions only. **Specify handing.**	557
971220-00	Lock/Unlock label only, order part number 971220-00.	10

Touchbar Options

Suffix		List Add
BRAILLE	Vision Impaired Touchpad, Raised Letters and Braille (US32D) Standard copy "Caution Stairwell." Other copy up to 20 alpha/numeric characters, one line, available, consult factory. **Specify handing.**	125
PUSH	Brass, Bronze and Stainless Touchbar trims embossed "PUSH." No additional charge when specified with device. **Specify handing.**	NC
RSS	Red silk-screened lettered Touchbar trims (as standard on SS devices). "Emergency Exit Only, Push to Open and Sound Alarm" No additional charge when specified with device. **Specify handing.**	NC
KN	Knurled Touchpad No additional charge when specified with device.	NC
SG	Safety Glow feature - for 3' device	455
	Safety Glow feature - for 4' device	474

CUSTOM GRAPHICS available on pushbar trim. See page 8 for details.

Weep Holes

Suffix		List Add
WH	Drainage (Weep) Holes in Mechanism Case 3' device will have 4 holes - 6" spacing, 4' device will have 6 holes - 6" spacing	89

Anti-Microbial Finish

Suffix		List Add
AM	Antimicrobial coating available in US26D, use prefix-AM when ordering. Example US26D-AM *US32D-AM available only on 98 series devices)	
	For Device with or without Trim	68
	For Trim Only (US26D-AM)	32

Prices subject to change without notice.

Indicates products that have EPD documentation available and meet LEED v4.

Electric Latch Retraction

See XP98/99 Product Catalog for required accessory equipment

Device Prefix	Description	List Add
EL	Electric Latch Retraction	921
HD-EL	Electric Latch Retraction with Hex Dogging (Panic Only)	921
SD-EL	Electric Latch Retraction with Special Center Case Dogging, available with "EL" option on XP98/99 Rim panic devices. SPECIFY HANDING	1329
QEL	Quiet Electric Latch Retraction	914
HD-QEL	Quiet Electric Latch Retraction with Hex Dogging (Panic Only)	914
SD-QEL	Quiet Electric Latch Retraction with Special Center Case Dogging, available with "QEL" option on XP98/99 Rim panic devices. SPECIFY HANDING	1322

EL Conversion Kits

(Field Conversion Kits for Electric Latch Retraction)

	Standard		Allegion Connect -CON		
	3' device	**4' device**	**3' device**	**4' device**	**List Price**
EL Baseplate Conversion Kit	050070	050078	050853	050854	1074
HD-EL Baseplate Conversion Kit (Hex Dogging included - Panic Only)	050384	050385	050855	050856	1074

QEL Conversion Kits

(Field Conversion Kits for Quiet Electric Latch Retraction)

Baseplate Conversion Kits (May be used for ANY conversion application)					
QEL Baseplate Conversion Kit	958003	040065	040063	040066	960
HD-QEL Baseplate Conversion Kit (Hex Dogging included - Panic Only)	958004	040067	040064	040068	960
Modular Conversion Kits (For Panic Devices, for Fire-rated Devices sold after October 2014, or for replacing existing motor)					
QEL Modular Conversion Kit	114317	114317	040061	040061	914
HD-QEL Modular Conversion Kit (Hex Dogging included - Panic Only)	958002	958002	040062	040062	914

Exit Alarm

Suffix		List Add
ALK	Exit Alarm Price includes switch - "RX" switch, "LXLC" is optional at no additional charge. To order Less Switch, **Deduct $249 list.** 9 volt battery included.	617

Switches

Prefix		List Add
RX	Request to Exit	249
RX-LC	Request to Exit Low Current	288
RX-2	Request to Exit Double Switch	309
RX-AUX	RX to RX-2 Conversion - Order part number 050271.	258
WP-RX	Waterproof Request to Exit	358
LX-LC	Latchbolt Monitoring Low Current	288
LX-RX-LC	Request to Exit / Latchbolt Monitoring combination Low Current	450

See page 107 for field-installed RX switches, the LX-LC switch is factory installed only.

Prices subject to change without notice. Indicates products that have EPD documentation available and meet LEED v4.

Electric Unlocking

Prefix			List Add
E996	E996 Electric Unlocking of outside E996 Trim - for XP98/99 rim devices. Available with L or LBE functions only. **Specify Handing** Available standard in 12 or 24 VDC, Fail Safe (FS) and Fail Secure (FSE). Can also be converted in the field. See Page 93 for pricing and optional lever designs.		617
	RETROFIT KITS FOR EXISTING 996L TRIM		
	996 R/V/C Conversion to E Kit	Order part number 050672-00	687
	996 Mort Conversion to E Kit	Order part number 050673-00	714

Chexit

Prefix			List Add
CX	**Chexit – Controlled Exit Device** 15 Second Delay furnished standard.		1811
Chexit Options:			**List Add**
	RCM	Remote Chexit Module	259
	*** RCM KIT-98**	Less Module - specify part number 040199 and finish.	259
	*** RCM KIT-99**	Less Module - specify part number 040198 and finish.	259
	0 Delay	0 Second Delay	133
	****30 Delay**	30 Second Delay	133
	BOCA-15 Delay	15 second delay with BOCA Modification	133
	****BOCA-30 Delay**	30 second delay with BOCA Modification	133
	****Other Delays**	2-60 Seconds in 2 second intervals or infinite delay	178

* 15 second Module sold separately. Specify part number **040086**.
**** Over 15 second delay requires a letter of approval from the authority having local jurisdiction over the premises prior to the installation of the device. Allegion cannot grant such approval nor does it warrant local jurisdiction compliance.**
Chexit is not available with any electrical options (EL, QEL, PN).
Chexit is not available with any switches (RX, RXLC, RX2, WP-RX, LX, LXLC, LXRX, LXRXLC, SS)

Connectors

Suffix		List Add
CON	Cross-category solution using interconnect components for electrified options. **Available with ALK, LXLC, RX and RXLC switches.**	N/C

XP98/99 Retrofit Kits

Model	Description	US26D	313 315 US28	US3 US15 US26	US32D	US4 US10
XP99-909	98/99 Series Device conversion to XP with 909 strike. Order part number 050676 - Specify finish.	973	939	1072	1009	966
XP99-954	98/99 Series Device conversion to XP with 954 strike. Order part number 050675 - Specify finish.	1078	1044	1155	1113	1072

Door Thickness >2-1/4" - 4 1/4"

Suffix		List Add
Door Thickness > 2-1/4" - <= 4 1/4"	XP98/99 Rim devices EO (exit only no trim) with sex bolts.	89
	XP98/99 Rim devices NL-OP (with 110NL cylinder control) with sex bolts.	178
	XP98/99 Rim devices NL-OP (with 110NL cylinder control) NO sex bolts.	89

Prices subject to change without notice.

POOL EXIT HARDWARE

Designed to meet specific needs of pool enclosures
Weather-resistant components ideal for outdoor applications

Compliance Specification:
UL Listed for panic exit hardware (UL 305)
ANSI/BHMA 156.3 - 2014, Grade 1
Meets International Building Code for Pool Enclosures
Compliant to ADA 1010.1.9 Door Operations

Devices

(Prices includes 909 Strike)

	3'		4'		
	US26D	313	US26D	313	Standard Trim
98/9952L	2293	2208	2311	2226	252L
98/9952L-BE	2293	2208	2311	2226	252L-BE

Accessories

Trim

	SP28	SP313
252L	440	440
252L-BE	440	440

Strike

	US19	SP28	SP313
699	115	115	115

Prices subject to change without notice.

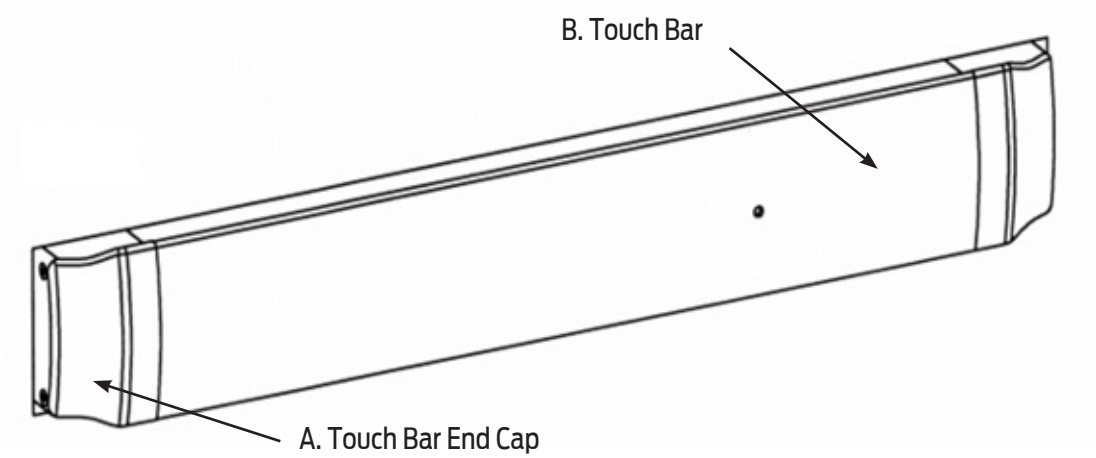

Standard Finishes

Color	US Number	BHMA Number	A	B -Touch Bar Finishes*
Bright Brass	US3	605	Powder Coat - Black 315, 622	Bright Brass US3
Satin Brass	US4	606	Powder Coat - Black 315, 622	Satin Brass US4
Satin Bronze	US10	612	Powder Coat - Black 315, 622	Satin Bronze US10
Polished Chrome	US26	625	Powder Coat - Black 315, 622	Bright Stainless Steel US32
Satin Chrome	US26D	626	Powder Coat - Black 315, 622	Satin Stainless Steel US32D
Anodized Aluminum	US28	628	Powder Coat - Black 315, 622	Satin Stainless Steel US32D
Duranodic Dark Bronze	313	710	Powder Coat - Black 315, 622	Powder Coat 313, 710
Satin Chrome, Antimicrobial	US26D-AM	626-AM	AM Clear over 622	AM Clear over Anodized

* Anodized Equivalent
No Sex Bolts are needed for the **94/95 Series** device.

Prices subject to change without notice.

94/95 *INPACT* Series • Summary

EXIT HARDWARE

Type of Device

94/9547 (Concealed Vertical Rod)	**94/9548** (Concealed Vertical Rod)	**94/9575** (Mortise Lock)

Function

EO (Exit Only)	**DT** (Dummy Trim)	**L** (Lever-06 Standard)	**LDT** (Lever-Dummy Trim)
NL (Night Latch-Key Retracts)	**LBE** (Lever-Blank Escutcheon)	TL (Turn Lever)	**TLBE** (Turn Lever - Blank Escutcheon)
TLOP (Turn Lever, Opt. Pull)			

Rating

None (Panic Exit Device)	**- F** (Fire Exit Device)

Device Finish

US3 (Bright Brass)	**US4** (Satin Brass)	**US10** (Satin Bronze)	**US26** (Bright Chrome)
US26D (Satin Chrome)	**US28** (Anodized Aluminum)	**313** (Duranodic Dark Bronze)	**US26D-AM** (Antimicrobial)

Device Handing

RHR (Right Hand Reverse)	**LHR** (Left Hand Reverse)

Switch Options

LX (Latchbolt Monitoring)

Electric Options

QEL (Quiet Electric Latch Retraction)

Device Options

CYL (Include Cylinder)	**PL** (Pullman Latch w/ES Strike)	**AX** (Accessible Device)

Rods For Surface / Concealed Vertical Devices only

LBR (Less Bottom Rod)	**LBRAFL** (LBR with Aux. Fire Pin)

Strike Series

LS (Less Strike)	**LTS** (Less Top Strike)	**575** (Std. Mortise)	**575-2** (Opt. Mortise)
576A/576B (Opt. Mortise)	**338** (Std. Concealed Vertical Rod)		

Bottom Strike Series

LBS (Less Bottom Strike)	**304L** (Mortise)	**385A** (Adjustable Mortise)

Strike Finish

US3 (Bright Brass)	**US4** (Satin Brass)	**US10** (Satin Bronze)	**US10B** (Satin Bronze-Oil Rubbed)
US19 (Flat Black)	**US32** (Bright Stainless)	**US32D** (Satin Stainless)	**MD** (e-Moly)

Trim Options

LT (Less Trim)	**550** (Opt. Offset Dummy Trim)	**392-7** (Opt. Wire Pull Trim)

Prices subject to change without notice.

Trim Lever Styles 06 Lever Standard

03, 06, 07, 12, 17 (Levers)

Trim / Control Finish

US3 (Bright Brass)	**US4** (Satin Brass)	**US10** (Satin Bronze)	**US10B** (Satin Bronze-Oil Rubbed)
US19 (Flat Black)	**US26** (Bright Chrome)	**US26D** (Satin Chrome)	**SP28** (Sprayed Lacquer Aluminum)
SPBLK (Black Painted)	**SP313** (Dark Bronze)	**US26D-AM** (Anti-Microbial)	

Control Options

LC (Less Control)	**376T** (Thumbturn Control - CV)	**940L** (Lever Control)

Control Lever Styles 06 Lever Standard

03, 06, 07, 12, 17 (Levers)	**AST** (Asti Lever)	**ACC** (Accent Lever)	**MER** (Meronia Lever)
	01, 02, 05, 16, 18 (Levers)	**03K** (03 Knurled Lever)	**06K** (06 Knurled Lever)

03 SS, 06 SS, 17 SS, LAT SS, LON SS, M57, M62 (Stainless Steel Levers)

M51, M52, M53, M54, M55, M56, M61, M63, M81, M82, M83, M84, M85, ME1, ME2, ME3

Door / Frame Material

HM (Hollow Metal)

Door Thickness

1.3/4 (1-3/4" Standard)

Door Application

D (Double Egress)	**P** (Pair of Doors)	**S** (Single Door)

Mortise Lock

LL (Less Lock)	**SS7500IN**	**7500IN**

Mortise Lock Finish

US3 (Bright Brass)	**US4** (Satin Brass)	**US10** (Satin Bronze)	**US10B** (Satin Bronze-Oil Rubbed)
US19 (Flat Black)	**US32** (Bright Stainless)	**US32D** (Satin Stainless)	**SP28** (Sprayed Lacquer Aluminum)

Prices subject to change without notice.

Devices 3' to 4' are priced complete with standard trim, and strike(s).
Cylinders are not included in price.

EXIT HARDWARE

Concealed Vertical Rod Devices

(Prices includes 338 and 385 Strikes)

	US26D	US28	313	US10	US4	US3 US26	Weight lbs.	Standard Trim/Control
94/9547EO	1713	1607	1634	1721	1797	1911	17	–
94/9547DT	2226	2120	2147	2234	2224	2438	19	550DT
94/9547L	2388	2282	2328	2445	2472	2669	22	940L
94/9547L-BE	2388	2282	2328	2445	2472	2669	22	940L-BE
94/9547L-DT	2472	2366	2417	2527	2556	2717	22	940L-DT
94/9547TL	2958	2852	2879	3007	2853	3230	22	550DT/376T
94/9547TL-BE	2922	2816	2843	2976	2814	3190	22	550DT/376T-BE

FIRE EXIT HARDWARE

Concealed Vertical Rod Devices

(Price includes 338 and 385A strikes)

94/9547EO-F	1978	1879	1931	2009	2092	2271	17	–
94/9547DT-F	2491	2392	2444	2522	2519	2798	22	550DT
94/9547L-F	2653	2554	2625	2733	2767	3029	22	940L
94/9547L-BE-F	2653	2554	2625	2733	2767	3029	22	940L-BE
94/9547TL-F	3223	3124	3176	3295	3148	3590	22	550DT/376T
94/9547TL-BE-F	3187	3088	3140	3264	3109	3550	22	550DT/376T-BE

EXIT HARDWARE

Concealed Vertical Rod Devices

(Prices includes 338 and 385 Strikes)

94/9548EO	1963	1856	1882	1968	2046	2160	17	–
94/9548DT	2476	2369	2395	2481	2473	2687	19	550DT
94/9548L	2638	2531	2576	2692	2721	2918	22	940L
94/9548L-BE	2638	2531	2576	2692	2721	2918	22	940L-BE
94/9548L-DT	2722	2615	2665	2774	2805	2966	22	940L-DT
94/9548TL	3208	3101	3127	3254	3102	3479	22	550DT/376T
94/9548TL-BE	3172	3065	3091	3223	3063	3439	22	550DT/376T-BE

FIRE EXIT HARDWARE

Concealed Vertical Rod Devices

(Price includes 338 and 385A strikes)

94/9548EO-F	2227	2129	2179	2258	2341	2520	17	–
94/9548DT-F	2740	2642	2692	2771	2768	3047	22	
94/9548L-F	2902	2804	2873	2982	3016	3278	22	940L
94/9548L-BE-F	2902	2804	2873	2982	3016	3278	22	940L-BE
94/9548TL-F	3472	3374	3424	3544	3397	3839	22	550DT/376T
94/9548TL-BE-F	3436	3338	3388	3513	3358	3799	22	550DT/376T-BE

Prices subject to change without notice.

Devices 3' to 4' are priced complete with standard trim, and strike(s).
Cylinders are not included in price.

EXIT HARDWARE

Mortise Lock Devices

(Price includes 575 strike)

	US26D	US28	313	US10	US4	US3 US26	Weight lbs.	Standard Trim/Control
94/9575EO	2082	1974	2030	2112	2191	2304	17	–
94/9575DT	2595	2487	2543	2625	2618	2831	19	550DT
94/9575NL	2595	2487	2543	2625	2618	2831	22	550DT
94/9575L	2757	2649	2724	2836	2866	3062	22	940L
94/9575L-BE	2757	2649	2724	2836	2866	3062	22	940L-BE
94/9575L-DT	2841	2733	2813	2918	2950	3110	22	940L-DT

FIRE EXIT HARDWARE

Mortise Lock Devices

(Price includes 575 strike)

94/9575EO-F	2354	2258	2329	2406	2493	2669	17	–
94/9575DT-F	2867	2771	2842	2919	2920	3196	22	550DT
94/9575NL-F	2867	2771	2842	2919	2920	3196	22	550DT
94/9575L-F	3029	2933	3023	3130	3168	3427	22	940L
94/9575L-BE-F	3029	2933	3023	3130	3168	3427	22	940L-BE

Prices subject to change without notice.

94/95 *INPACT* Series • Options

Available on all 94 / 95 Series unless noted

Device Length

		List Add
2' 6" up to 2' 9.7/8" Door	Add per Device	142

Accessible Device

Prefix		List Add
AX	Accessible device compliant with the California Building Code (Section 11B-309.4) requirement for 5 lb. maximum operation force. Available on AX94/9547 and AX94/9547-F. Trim functions available EO, DT, NL, L, LBE, LDT and LNL. Not available with QEL.	62

Less Bottom Rod

Suffix		List Add
LBR	Less Bottom Rod available with UL Fire Label at no additional charge on 94/9547-F Devices. LBR devices must be ordered pairs of vertical rod devices	N/C
		List Price
LBR KIT	Fire Pin Kit, complete auxiliary bolt field replacement kit. Order part number 051860-32	151

Electric Latch Retraction

See 94/95 INPACT Product Catalog for required accessory equipment

Device Prefix		List Add
QEL	Quiet Electric Latch Retraction	914
Conversion Kit		
QEL 94/95 Inpact Modular Conversion Kit	Order part number 958005-00	914

Signal Switch

		List Add
SS	94/9575 Signal Switch feature on Mortise Device (includes SS7500-IN lock) - Specify Handing	1092

Switches

Prefix		List Add
LX	Latchbolt Monitoring. Order part number 050226-00 for field replacement.	249

Prices subject to change without notice.

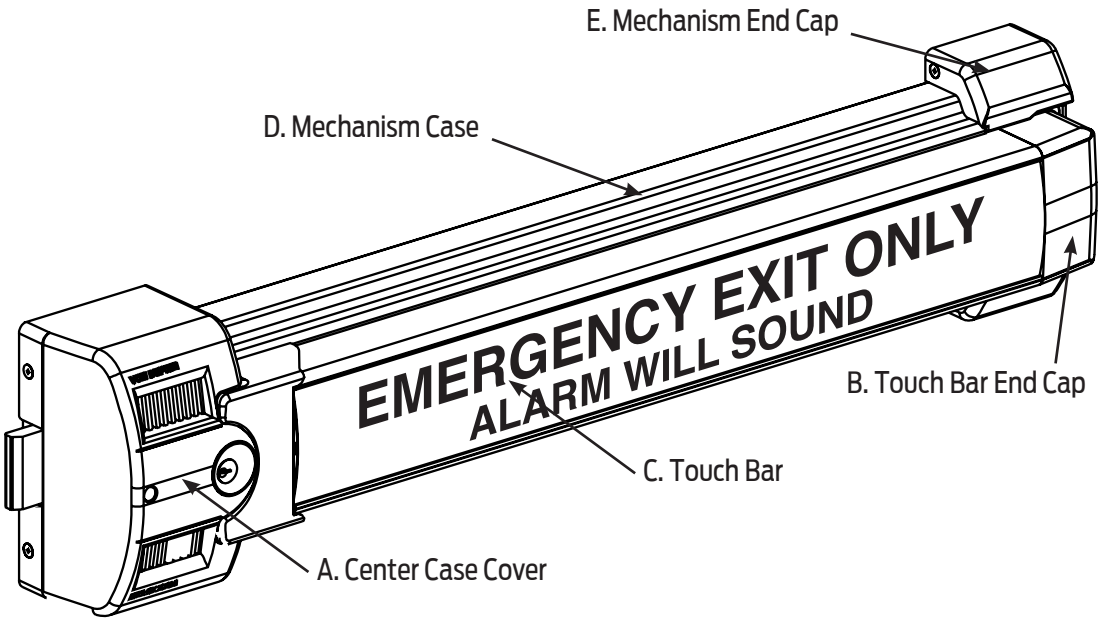

Standard Finishes

Color	US Number	BHMA Number	A	B, E	C -Touch Bar Finishes	D
Anodized Aluminum	US28	628	Powder Coat	Plastic - Silver	Satin Stainless Steel US32D, 630	Anodized
Duranodic Dark Bronze	313	710	Powder Coat	Plastic - Brown	Duranodic Dark Bronze 313, 710	Powder Coat
Black	315	711	Powder Coat	Plastic - Black	Black 315, 711	Powder Coat

2670 Series Sex Bolt Quantities

Application	Sex Bolt 325 (Optional)
Aluminum Door	6

Prices subject to change without notice.

2670 Guard-X Series • Summary

Type of Device		
2670		
Device Finish		
US28 (Anodized Aluminum)	**313** (Duranodic Dark Bronze)	**315** (Black)
Device Length		
36" to 48" Door Width		
Device Handing		
RHR (Right Hand Reverse)	**LHR** (Left Hand Reverse)	
Device Options		
SNB (6 - # 325 Sex Bolts recommended for Alum doors)		**CYL** (3216 Rim Cylinder)
Pushpad Sign		
ENG (English w/Braille Standard)	**FR** (French)	**SP** (Spanish)
Strike Series		
LS (Less Strike)	**267** (Standard)	**2609** (Double Door Strike)
Strike Finish		
US19 (Flat Black)		
Trim Options		
LT (Less Trim)	**210DT** (Dummy Pull Trim)	**230DT** (Dummy Pull Trim)
Trim Finish		
SP28 (Laquer Sprayed Aluminum)	**SP313** (Dark Bronze)	
Door Thickness		
1.3/4 (1-3/4" Standard)		

2670 Guard-X Series • Devices

Locks are priced complete with strike, screw pack, and battery.
Rim cylinders and Sex Bolts are not included and must be ordered separately.
(Price includes 267 strike)

Model No.	Description	US28	313	315	Wt. lbs.
2670	(36" to 48" Door Width)	627	627	627	15

2670 Notes:
Pushpad Sign furnished in English w/Braille standard. French and Spanish language available at no additional charge.

Accessories:

Model No.	Description	US19	SP28	SP313	US26D	US10B
PT790	9-Volt External Power Supply	182	–	–	–	–
210DT x 050140	Dummy Pull Trim and Screw Pack	–	71	71	–	–
230DT x 050140	Dummy Pull Trim and Screw Pack	–	130	130	–	–
3216	Rim Cylinder	–	–	–	89	89
2609	Double Door Strike	111	–	–	–	–
267	267 Strike Pkg	37	–	–	–	–

Prices subject to change without notice.

Accessories

Prices subject to change without notice.

Dummy Cross Bars / Touch Bars

Dummy Cross Bars

Dummy cross bar priced complete with sex bolts.

Model No.	Description	US26D	US10B	US10	US4	US3 US26 643E SPBLK
55DU	55 series device dummy crossbar	1852	1852	2164	1744	2307
88DU	88 series device dummy crossbar	946	946	986	793	1107

Dummy Touch Bars

3' dummy touch bar priced complete with sex bolts.
4' add $18 list.

Model No.	Description	US26D	US28	US32D	313	US4 US10	US3 US26 643E	315	US15
330	33A/99 series device dummy touch bar	799	661	-	683	715	799	1452	-
350	35A/98 series device dummy touch bar	799	661	843	683	715	799	1452	799

Switch Option

Prefix		List Add
RX	Request to Exit Switch. Available for 330, 350, 55DU, 88DU.	249
RX-2	Double RX - Request to Exit Switch. Available for 330, 350.	309
WP-RX	Waterproof Request to Exit - Available for 330, 350.	358
RX-AUX	Convert existing RX switch to RX-2 switch. Order part number 050271-00. Available for 330, 350	258
SS	Signal Switch. Available for 330/350. Specify handing RHR or LHR.	509

Dummy Cross Bar and Touch Bar Notes:

Back to Back Mounting - available on 330, 350 when used with outside trim. Finished fasteners supplied at **$15.00 list add**.
Finish - US32D available on 350 series only.
Antimicrobial coating is available in US26D (US26D-AM) and US32D-AM (350 series only) finishes, **$68 list add.**

Prices subject to change without notice.

Rim Strikes

Model No.	Description	Standard		Optional						
		Non Finished	US19	US26D	US32D	US4 US10 US10B	US3	US26	US32	Wt. lbs.
264	22/88/98/99, 98/9957 Panic - Optional	–	101	117	–	–	–	–	-	0.25
268	88 Fire - Standard	–	125	-	147	167	176	-	176	0.38
299	22/88/98/99, 98/9957 Panic - Standard	–	61	73	–	73	95	95	–	0.30
299F	22/98/99 Fire, 98/9957 Fire - Standard	–	77	–	102	119	137	–	137	0.30
499F	22/98/99 Fire w/9954 Mullion - Standard	–	182	–	190	–	–	–	–	0.45
1408	Panic w/5754 Mullion - Standard	274	–	–	–	–	–	–	–	0.30
1409	55 Panic - Standard/22 - Optional	147	–	–	–	–	–	–	–	0.30
1410	Panic, Integral Stop - Optional	147	–	–	–	–	–	–	–	0.30
1439	33A/35A Panic - Standard/22 - Optional	-	147	–	–	–	–	–	–	0.30
1439F	33A/35A-F - Optional	-	153	-	-	-	-	-	-	–
1606	Panic, Sgl or Pr w/1654 Mullion - Optional	73	–	–	–	–	–	–	–	0.20
****1609**	Panic - Optional	–	101	113	–	113	122	122	-	0.30
****1610**	88 Panic, Stock HM Doors - Optional	–	101	113	–	113	122	122	-	0.30
267	2670 GUARD-X - Standard	–	37	–	–	–	–	–	–	–
2609	2670 GUARD-X, Pairs - Optional	–	111	–	–	–	–	–	–	–
909	XP98/99 - Standard	–	77	–	–	–	–	–	–	0.30
954	XP98/99 Mullion - Optional	–	182	–	–	–	–	–	–	0.45
050996-622	299F Strike Adapter	-	162	-	-	-	-	-	-	–

** 1609 and 1610 must be used with coordinator. Not a UL Fire Exit Hardware listed application.

Vertical Rod Top Strikes

150	33/3550AWDC/98/9950WDC includes shims and fasteners	43	–	–	–	–	–	–	–	–
249	33/3549A/98/9949 includes shims and fasteners	44	–	–	–	–	–	–	–	–
260U	22/33A/35A/88/98/9927/57 Panic, Flush Transom	–	101	113	–	113	137	137	–	0.30
260U-F	22/33A/88/98/9927/57 Fire Flush Transom	–	–	-	281	–	–	–	–	0.00
264	22/33A/35A/88/98/9927/57 Panic - Optional	–	101	117	–	–	–	–	–	0.25
266	33/3527A Panic - Standard	–	113	-	125	142	160	–	160	0.25
283	33A/35A/98/9947WDC, Wood Frames - specify door thickness	64	–	–	–	–	–	–	–	0.10
299	22/88/98/9927/57 Panic - Standard	–	61	73	–	73	95	95	–	0.30
299F	22/98/9927 Fire - Standard	–	77	–	102	119	137	–	137	0.30
338	33A/35A/98/9947 and WDC - Standard	64	–	–	–	–	–	–	–	0.35
499F	33/3527A/98/9927 LBR Fire, Pairs - Standard	–	182	–	190	–	–	–	–	0.45
471U	5547 Panic, HM Frame - Standard	61	–	–	–	–	–	–	–	0.10
472U	5547WDC, 1-3/4" Dr, WD Frame - Standard	–	61	63	–	65	84	84	–	0.10
473U	5547WDC, 2-1/4" Dr, WD Frame - Standard	–	61	63	–	65	84	84	–	0.10

Vertical Rod Bottom Strikes

248L-4	22/33A/35A/98/9927, 98/9957 Panic - Standard	58	–	–	–	–	–	–	–	0.15
301L	55/8847 Fire - Standard	133	–	–	–	–	–	–	–	0.35
304L	22/33A/35A/98/9927, 98/9957 - Standard	58	–	–	–	–	–	–	–	0.25
349	33/3594A/98/9949 includes anchors and fasteners	25	–	–	–	–	–	–	–	–
*** 385A**	33A/35A/98/9947/48 and WDC - Standard	124	–	–	–	–	–	–	–	0.80
450	33/3550AWDC/98/9950WDC includes anchor and fasteners	24	–	–	–	–	–	–	–	–

* The 385A is recommended over the 304L for wood door applications based on it's adjustability.

Mortise Lock Strikes

575	55/88/98/9975 - Standard	46	–	–	64	122	139	-	139	0.20
575-2	55/88/99/9875, Pairs 1-3/4" Dr - Optional	46	–	–	64	122	139	-	139	0.20
576A	55/88/98/9975, Pairs 1-3/4" Dr - Optional	125	–	–	133	150	166	-	166	0.20
576B	55/88/99/9875, Pairs 2-1/4" Dr - Optional	125	–	–	133	150	166	-	166	0.20

Prices subject to change without notice.

Trims

For other possible trim applications not shown, consult Von Duprin.

22 Series Trim

Model No.	Description	SP28 SP313	US26D US10B	Wt. lbs.
STANDARD:				
210DT	Dummy Trim	53	–	1.3
210NL	Night Latch	61	–	1.4
210K	Knob	239	–	1.8
230L	Lever	235	–	2.0
230TP	Thumbpiece	234	–	2.5
OPTIONAL:				
210K-BE	Knob, Blank Escutcheon	239	–	1.8
230EO	Exit Only Trim Plate	98	–	1.0
230DT	Dummy Trim	108	–	2.1
230NL	Night Latch	119	–	2.2
230L-BE	Lever, Blank Escutcheon	235	–	2.0
230TP-BE	Thumbpiece, Blank Escutcheon	234	–	2.5
110MD-NL	Night Latch Cylinder Assembly - HM Door	–	129	0.4
110WD-NL	Night Latch Cylinder Assembly - WD Door	–	129	0.4

33A/35A Series Trim

Model No.	Description	US26D	SPBLK US10B	US10	US4	US3 US15 US26 643E	Wt. lbs.
STANDARD:							
386DT	Dummy Trim	348	348	489	348	412	2.7
386NL	Night Latch - Specify handing	615	615	759	615	726	3.5
388	Night Latch Cylinder Trim	302	302	440	282	302	1.0
		US26D	**US10B**	**US10**	**US4**	**US3 SPBLK US26 643E**	**Wt. lbs.**
OPTIONAL:							
550DT	Dummy Trim - only available with 388 cyl. trim (Rim only)	513	513	513	427	527	2.0
392-6	Dummy Offset Pull	213	—	—	—	—	1.0

33A/35A Trim Notes:

Finish - Antimicrobial coating is available in US26D (US26D-AM) finish, **$32 list add**.

Prices subject to change without notice.

For other possible trim applications not shown, consult Von Duprin.

55 Series Trim

Model No.	Description	US26D	US10B	US10	US4	US3 US26 SPBLK 643E	Wt. lbs.
STANDARD:							
550DT	Dummy Trim	513	513	513	427	527	2.0
555NL	Night Latch Trim - HM Door	755	755	766	617	775	2.0
556NL	Night Latch Trim - WD Door	755	755	766	617	775	2.0
609DT	Dummy Trim	362	362	398	302	400	2.5
110MD-NL	Night Latch Cylinder Assembly - HM Door	129	129	129	121	131	1.0
110WD-NL	Night Latch Cylinder Assembly - WD Door	129	129	129	121	131	1.0
555NL-CA	Night Latch Cylinder Assembly - HM Door	364	364	365	315	374	1.0
556NL-CA	Night Latch Cylinder Assembly - WD Door	364	364	365	315	374	1.0

88 Series Trim

Specify device type when ordering (example: 880TP-V)

Model No.	Description	Device Type	US26D	US10B	US10	US4	US3 US26 SPBLK 643E	Wt. lbs.
STANDARD:								
880EO	Exit Only Trim Plate	R or V&M	204	216	248	145	252	1.0
880DT	Dummy Trim	R, V&M or V-SA	264	283	337	205	342	2.9
880NL	Night Latch	R or M	283	305	362	217	368	2.9
880TP	Thumbpiece	R, V, or M	291	311	408	277	411	2.1
880TP-BE	Thumbpiece, Blank Escutcheon	R, V, or M	291	311	408	277	411	2.1
880K	Knob	R, V, or M	342	367	433	277	437	2.7
880K-BE	Knob, Blank Escutcheon	R, V, or M	342	367	433	277	437	2.7
880K-DT	Knob, Dummy	R, V, or M	342	367	433	277	437	2.7
880K-NL	Knob, Night Latch	R only	342	367	433	277	437	2.7
OPTIONAL:								
608DT	Dummy Trim	–	371	371	452	291	457	2.5
608NL	Night Latch	R or M	371	371	452	291	457	2.5
608TP	Thumbpiece	R, V or M	399	399	487	311	488	2.9
608TP-BE	Thumbpiece, Blank Escutcheon	R or M&V	399	399	487	311	488	2.8
606K	Knob	–	415	415	441	343	445	2.4
606K-BE	Knob, Blank Escutcheon	–	415	415	441	343	445	2.4
606K-DT	Knob, Dummy	–	415	415	441	343	445	2.4

55/88 Trim Notes:

880 Trim - when used with 88-F Rim devices on wood or composite doors use trim suffix "WDF" (no additional charge) ex. 880WDF-EO

Prices subject to change without notice.

For other possible trim applications not shown, consult Von Duprin.

98/99 Series Trim

Specify device type when ordering (example: 990TP-R)

Model No.	Description	Device Type	US26D	SP313 US10B	*US19 SPBLK	US10	US4	US3 US15 US26 643E	Weight lbs.
STANDARD:									
990EO	Exit Only Trim Plate	–	164	170	170	213	141	192	1.1
990EO-w/CH	**Exit Only with Cylinder Hole**	**-**	**187**	**196**	**196**	**244**	**163**	**220**	
990DT	Dummy Trim	–	254	273	273	273	205	284	2.8
990NL	Night Latch	R&V or M	273	281	281	284	222	291	2.9
990TP	Thumbpiece	R&V or M	364	375	375	362	301	392	2.1
990TP-BE	Thumbpiece, Blank Escutcheon	R&V or M	364	375	375	362	301	392	2.1
996K	Knob	R&V or M	437	460	460	522	383	559	4.1
996K-BE	Knob, Blank Escutcheon	R&V or M	437	460	460	522	383	559	4.1
996K-DT	Knob, Dummy	–	426	444	444	506	375	537	4.1
996K-NL	Knob, Night Latch	R&V or M	426	444	444	506	375	537	4.1
110MD-NL	Night Latch Cyl. Assy, MD Dr	–	129	129	131	129	121	131	0.4
110WD-NL	Night Latch Cyl. Assy, WD Dr	–	129	129	131	129	121	131	0.4

* US19 available only on 996 trim.

OPTIONAL:									
696DT	Dummy Trim	–	394	394	394	377	307	437	2.5
696NL	Night Latch	R&V or M	426	426	426	411	342	464	2.5
696TP	Thumbpiece	R&V or M	483	458	458	479	387	555	2.9
696TP-BE	Thumbpiece, Blank Escutcheon	R&V or M	483	458	458	479	387	555	2.9
697DT	Dummy Trim	–	394	394	394	377	307	437	2.5
697NL	Night Latch	R&V or M	426	426	426	411	342	464	2.5
697TP	Thumbpiece	R&V or M	483	458	458	479	387	555	2.9
697TP-BE	Thumbpiece, Blank Escutcheon	R&V or M	483	458	458	479	387	555	2.9
996EO	Exit Only Trim Plate	R&V or M	337	347	347	392	332	411	–
392-7	Dummy Wire Pull	–	232	–	–	–	–	–	1.0

696/697 Trim Notes:

Wood or Composite Fire Labeled Doors - when using 696/697 trims with 98/99-F Rim Fire devices use trim suffix "WDF", ex. 696WDF
No additional charge.

Anti-Microbial Finish

Suffix		List Add
AM	Antimicrobial Coating available in US26D, use suffix-AM when ordering. Example US26D-AM	32

Door Thickness >2-1/4" - 4 1/4"

Suffix		List Add
Door Thickness > 2-1/4" - <= 4 1/4"	110NL-MD or 110NL-WD	89

Prices subject to change without notice.

For other possible trim applications not shown, consult Von Duprin.

98/99 Series Trim

Specify device type when ordering (example: 996L-R)

Model No.	Description	Device Type	US26D	*US32 *US32D	SP313 US10B	US19 SPBLK	US10	US4	US3 US15 US26 643E	Weight lbs.
Lever Trim with Standard Lever Designs										
996L	Lever	R&V or M	589	709	605	605	615	553	687	3.8
996L-BE	Lever, Blank Escutcheon	R&V or M	589	709	605	605	615	553	687	3.8
996L-DT	Lever, Dummy	–	458	570	474	474	527	450	549	3.8
996L-NL	Lever, Night Latch	R&V or M	458	570	474	474	527	450	549	3.8

* US32D lever furnished with US15 trim plate. US32 lever furnished with US26 trim plate. Please see stainless steel lever designs below.

Lever Trim with M Collection Lever Designs										
996L	Lever	R&V or M	707	707	707	707	707	707	707	3.8
996L-BE	Lever, Blank Escutcheon	R&V or M	707	707	707	707	707	707	707	3.8
996L-DT	Lever, Dummy	–	568	568	568	568	568	568	568	3.8
996L-NL	Lever, Night Latch	R&V or M	568	568	568	568	568	568	568	3.8

* US32D lever furnished with US15 trim plate. US32 lever furnished with US26 trim plate.

Lever Designs

Suffix	
Standard	06 Lever Design - furnished standard. Optional Lever Designs - 01, 02, 03, 05, 07,12,16,17,18, Accent (ACC), Asti (AST), Merano (MER), Latitude (LAT), Longitude (LON) *Stainless Steel Levers - 03-SS, 06-SS, 17-SS, Latitude-SS (LAT-SS), Longitude-SS (LON-SS) are available in US32D or US32.
M Collection	M51, M52, M53, M54, M55, M56, M57, M61, M62, M63, M81, M82, M83, M84, M85 , ME1, ME2, ME3. *Stainless Steel Levers - M57 and M62 lever designs available in stainless steel only.
Handing	Field reversible and furnished RHR if not specified on all lever designs except 12, AST, MER, ACC, M61, M62, M63, M85. Specify handing RHR or LHR for lever designs 12, AST, MER, ACC, M61, M62, M63, M85, ME1, ME2.

Knurled Lever

Suffix		List Add
KN	Available standard on 02, 03, 06, 07, 17 lever ME1, ME2, and ME3 designs. Specify suffix KN (06-KN).	105
	Available for special order on M51, M52, and M81 lever designs. Specify suffix KN (M51-KN).	159

Anti-Microbial Finish

Suffix		List Add
AM	Antimicrobial Coating available in US26D, use suffix-AM when ordering. Example US26D-AM	32

Electric Unlocking

Prefix			List Add
E	Electric Unlocking of outside E996 Trim - for 98/99 rim, mortise, surface vertical and concealed vertical devices. Available with L or LBE functions only. Specify handing. Available standard in 12 or 24 VDC, Fail Safe (FS) and Fail Secure (FSE). Can also be converted in the field.		617
	RETROFIT KITS FOR EXISTING 996L TRIM		List Each
	996 R/V/C Conversion to E Kit	Order part number 050672-00	687
	996 Mort Conversion to E Kit	Order part number 050673-00	714

Switch

Prefix		List Add
RX	Request to exit 996L option available for use with 98/99 rim, mortise, surface and concealed devices. Specify trim "RX996"	249

Connectors

Suffix		List Add
CON	Cross-category solution using common interconnect components for electrified options. Available with E996 trim.	N/C

Quiet Mechanical

Prefix		List Add
QM	Controls motion to reduce operational noise. The QM trim option provides damper-controlled lever return. Available on 996L/LBE - R/V/M. Not available with E996 and RX996.	185

Prices subject to change without notice.

For other possible trim applications not shown, consult Von Duprin.

94/95 Series Controls

Model No.	Description	US26D	US10B SP313 SPBLK	US10	US4	US3 US26 643E
Lever Control with Standard Lever Designs						
940L**	Lever	675	694	724	675	758
940L-BE	Lever, Blank Escutcheon	675	694	724	675	758
940L-DT	Lever, Dummy	759	783	806	759	806
Lever Control with M Collection Lever Designs						
940L**	Lever	777	777	777	777	777
940L-BE	Lever, Blank Escutcheon	777	777	777	777	777
940L-DT	Lever, Dummy	824	824	824	824	824

**L-NL function is obtained with field conversion of L function.

Lever Designs

Suffix	
Standard	06 Lever Design - furnished standard. Optional Lever Designs - 01, 02, 03, 05, 07,12,16,17,18, Accent (ACC), Asti (AST), Merano (MER), Latitude (LAT), Longitude (LON) *Stainless Steel Levers - 03-SS, 06-SS, 17-SS, Latitude-SS (LAT-SS), Longitude-SS (LON-SS) are available in US32D or US32 through special order.
M Collection	M51, M52, M53, M54, M55, M56, M57, M61, M62, M63, M81, M82, M83, M84, M85, ME1, ME2, ME3. *Stainless Steel Levers - M57 and M62 lever designs available in stainless steel only.
Handing	Field reversible and furnished RHR if not specified on all lever designs except 12, AST, MER, ACC, M61, M62, M63, M85. Specify handing RHR or LHR for lever designs 12, AST, MER, ACC, M61, M62, M63, M85, ME1, ME2.

Knurled Lever

Suffix		List Add
KN	Available standard on 02, 03, 06, 07, and 17 lever designs. Specify suffix KN (06-KN).	105
	Available for special order on M51, M52, and M81 lever designs. Specify suffix KN (M51-KN).	159

Anti-Microbial Finish

Suffix		List Add
AM	Antimicrobial Coating available in US26D, use suffix-AM when ordering. Example US26D-AM	32

Prices subject to change without notice.

360 Series

Model No.	Description	US10B US26D SPBLK	*US32 *US32D	US10	US4	US3 US26 643E	US15	Weight lbs.
Lever Trim with Standard Lever Designs								
360L**	Lever, Key unlocks - 33/35A Rim, 33/3527A, 33/3547A	706	786	742	612	765	765	3
360L-BE	Lever, Blank Escutcheon - 33/35A Rim, 33/3527A, 33/3547A	671	744	714	564	723	723	5
360L-DT	Lever, Dummy - 33/35A Rim, 33/3527A, 33/3547A	651	724	688	554	706	706	5
Lever Trim with M Collection Lever Designs								
360L**	Lever, Key unlocks - 33/35A Rim, 33/3527A, 33/3547A	784	784	784	784	784	784	3
360L-BE	Lever, Blank Escutcheon - 33/35A Rim, 33/3527A, 33/3547A	742	742	742	742	742	742	5
360L-DT	Lever, Dummy - 33/35A Rim, 33/3527A, 33/3547A	723	723	723	723	723	723	5

Finish - *US32D lever furnished with US15 trim plate. US32 lever furnished with US26 trim plate.
US15 control trim for use on 35A series device only.

**L function is field-convertible to L-NL.

Standard Lever Designs

Suffix	Description
Standard	06 (furnished standard when lever design is not specified)
Optional-360	01, 02, 03, *03-SS, 05, *06-SS, 07,12, 16, 17, *17-SS, 18, Accent (ACC), Asti (AST), Merano (MER), Latitude (LAT), *LAT-SS, Longitude (LON), *LON-SS.
Optional-E360	01, 02, 03, 05, 07, 12, 16, 17, Lattitude (LAT),
Optional **Special Order-E360	*03-SS, *06-SS, *17-SS, 18, Accent (ACC), Asti (AST), *LAT-SS, Longitude (LON), *LON-SS, Merano (MER).
Optional **Special Order-643E Finish	18, Accent (ACC), Asti (AST), Merano (MER).

M Collection Lever Designs

Suffix	Description
Optional-360	M51, M52, M53, M54, M55, M56, *M57, M61, *M62, M63, M81, M82, M83, M84, M85, ME1, ME2, ME3
Optional -E360	M51, M52, M53, M54, M55, M56, *M57, M61, *M62, M63, M81, M82, M83, M84, M85, ME1, ME2, ME3,
Optional **Special Order-643E Finish	M51, M52, M53, M54, M55, M56, *M57, M61, *M62, M63, M81, M82, M83, M84, M85.

*Stainless Steel Levers (SS) - are available in US32D or US32.US15 control trim for use on 35A series device only.

**Consult factory for lead time.

Handing	Handing is field reversible and furnished RHR if not specified on all lever designs except 12, AST, MER, ACC, M61, M62, M63, M85. Specify handing RHR or LHR for lever designs 12, AST, MER, ACC, M61, M62, M63, M85, ME1, ME2

Knurled Lever

Suffix		List Add
KN	Available standard on 03, 06, M51, M52, M81 lever designs. Specify suffix KN (06-KN).	105
	Available for special order on 02, 17 lever designs. Specify suffix KN (02-KN). Consult factory for lead time.	159

Anti-Microbial Finish

Suffix		List Add
AM	**US26D-AM** - Antimicrobial Coating on US26D finish available standard.	32
	US32D-AM - Antimicrobial Coating on US32D finish available for special order on lever designs 03-SS, 06-SS, 17-SS, LAT-SS, LON-SS, M57, M62.	32

Solid Wood or Composite Doors

Suffix		List Add
33-WDA	Required when used on solid wood or composite doors.	52

Electric Unlocking

Prefix		List Add
E	Electric Unlocking of outside trim for use on all device types except mortise lock devices.Must be furnished LBE functions only. **Specify handing**. Prefix trim "E" (example E360). Specify Fail Safe (FS) or Fail Secure (FSE). 24VDC furnished standard, 12VDC available through special order. Consult factory for lead time.	617

Prices subject to change without notice.

Control Trims

370 Series

Model No.	Description	US10B US26D SPBLK	US10	US4	US3 US26 643E	US15	Weight lbs.
371L	Lever, Key unlocks - 5547/8847-F	732	821	629	792	–	5
371L-BE	Lever, Blank Escutcheon - 5547/8847-F	696	742	590	752	–	5
373L	Lever, Key unlocks - 88 Rim, 8827/8875	673	580	580	792	–	3
373L-BE	Lever, Blank Escutcheon - 88 Rim, 8827/8875	639	545	545	752	–	5
373L-DT	Lever, Dummy - 88 Rim, 8827/8875	622	522	522	732	–	4
375L	Lever, Key unlocks - 5575	868	997	769	989	–	4
375L-BE	Lever, Blank Escutcheon - 5575	832	963	728	946	–	6
375L-DT	Lever, Dummy - 5575	813	945	714	931	–	5
376L	Lever, Key unlocks - 5547	877	877	775	935	–	
376L-BE	Lever, Blank Escutcheon - 5547/8847-F	843	843	740	902	–	
376WDC-L	Lever, WD - Key unlocks - 5547WDC	877	877	775	935	–	
376WDC-L-BE	Lever, WD, Blank Escutcheon - 5547WDC	843	843	740	902	–	
378L	Lever, Key Unlocks - 237	732	773	629	792	–	5
378L-BE	Lever, Blank Escutcheon - 237	696	742	590	752	–	5
379L	Lever, Key Unlocks - 55 Rim	878	787	787	997	–	
379L-BE	Lever, Blank Escutcheon - 55 Rim	844	758	758	955	–	

Lever Designs

Suffix	Description
Standard	06 (furnished standard when lever design is not specified)
Optional	01, 02, 03, 07, 12, 16, 17
Optional * Special Order	05, 18, ASTI
*Consult factory for lead time.	
Handing	Requires handing, specity RHR or LHR.

Knurled Lever

Suffix		List Add
KN	Available standard on 02, 03, 06, 07, and 17 lever designs. Specify suffix KN (06-KN).	105

Anti-Microbial Finish

Suffix		List Add
AM	Antimicrobial Coating available in US26D, use suffix-AM when ordering. Example US26D-AM	32

Solid Wood or Composite Doors

Suffix		List Add
10WDA	Required when used on solid wood or composite doors.	52

Electric Unlocking

Prefix		List Add
E	Electric Unlocking of outside trim for use on all device types except mortise lock devices. Available for 373. For all other 370 Controls, available through special order. Must be furnished LBE functions only. **Specify handing**. Prefix trim "E" (example E373). Specify Fail Safe (FS) or Fail Secure (FSE). 24VDC furnished standard, 12VDC available through special order. Consult factory for lead time.	617

Prices subject to change without notice.

Thumbturns

Model No.	Description	US10B US26D SPBLK	US10	US4	US3 US26 643E	US15	Weight lbs.
360T	Thumbturn - 33/35A Rim	732	773	629	792	792	4
360T-BE	Thumbturn, Blank Escutcheon - 33/35A Rim	696	742	590	752	752	4
374T	Thumbturn - 33/3527A, 98/9927	732	773	629	792	792	5
374T-BE	Thumbturn, Blank Escutcheon - 33/3527A, 98/9927	696	742	590	752	752	5
376T	Thumbturn - 33/3547A, 5547, 8847	732	773	629	792	792	4
376T-BE	Thumbturn, Blank Escutcheon - 33/3547A, 5547, 8847	696	742	590	752	752	4
376WDC-T	Thumbturn, WD - 33A/35A/55/98/9947WDC	732	773	629	792	792	4
376WDC-T-BE	Thumbturn, Blank Escut., WD - 33A/35A/55/98/9947WDC	696	742	590	752	752	4
377T	Thumbturn - 8827, WS98/9927	732	773	629	792	-	4
377T-BE	Thumbturn, Blank Escutcheon - 8827	696	742	590	752	-	4

Anti-Microbial Finish

Suffix		List Add
AM	Antimicrobial Coating available in US26D, use suffix-AM when ordering. Example US26D-AM	32

Solid Wood or Composite Doors

Suffix		List Add
10WDA	Required with 370 series lever control trim when used on solid wood or composite doors.	52
33-WDA	Required with 360 series lever control trim when used on solid wood or composite doors.	52

Electric Unlocking

Prefix		List Add
E	E360/E370 Cylinder Controls - Electric Unlocking of outside trim for use on all vertical device types. Must be furnished T-BE or TL-BE functions only Specify Fail Safe (FS) and Fail Secure (FSE). 24VDC furnished Consult factory for lead time. standard, 12VDC available through special order.	617

Blank Plates

Model No.	Description	US10B US26D SPBLK	US10	US4	US3 US26 643E	US15
360EO	Blank Plate - 33A/35A Rim, 33/3527A, 33/3547A	342	358	294	369	369
373EO	Blank Plate - 88, 8827, 8875	342	358	294	369	-
374EO	Blank Plate - 33/3527A, 98/9927	342	358	294	369	369
376EO	Blank Plate - 3347, 8847	342	358	294	369	369

Prices subject to change without notice.

Cover Plates

Model No.	Description	SP28 SP313	US10B US26D	US32D	US10	US4	US3 SPBLK US26 US15 US19
10WDA	370 Series Controls on Wood Doors	—	52	—	52	52	52
33A-WDA	360 Series Controls on Wood Doors	—	52	—	52	52	52
5547WDC	5547WDC Scalp Plate	—	159	159	164	159	167
9947WDC	9947WDC Scalp Plate	—	64	40	64	64	124
50WDC	33A/35A/98/9950WDC Cover Plate	64	—	64	64	64	64
229	22 Rim Device	104	—	— —	—	—	—
589	5575 Device on Wood Doors	—	158		214	184	198
882	88 Rim Device	—	155	—	—	134	173
887	88 Rim/8827 Pairs with ANSI 161 door cutout	—	155	—	—	134	—
888	8875 or 8827 with ANSI 161 door cutout	—	155	—	—	134	—
889	373L Control with Sexbolts - specify device type R, M or V	—	233	—	237	222	246
997	98/99 Rim Device	104	—	—	104	104	
998	994L Trim retrofit Plate	—	94	—	74	74	121

Cylinders

Model No.	Description	US4 US10 US10B US26D	Weight lbs.
3215	Mortise 1-1/4" - 20-001 XQ11-949	89	0.7
3216	Rim	89	0.6

Note: Custom keying is not available

Glass Bead Kits

Model No.	Description	Sprayed finish to Match US4, US10, US19, SP28, SP313	Wt. lbs.
98/99GBK-R/M	1/4" 98/99 Rim/Mortise	69	2.2
98/99GBK-CV	1/4" 98/99 Concealed Vertical	69	2.2
98/99GBK-CV-WDC	1/4" 98/99 Concealed Vertical for Wood Doors	69	
98/99GBK-SV	1/4" 98/99 Surface Vertical	98	2.4
98/99GBK-R-499F	1/4" 98/99 Rim used with 499-F Strike	98	3.6
XP98/99GBK-R/M	1/4" XP98/99 Rim/Mortise	111	
XP98/999GBK-R-954	1/4" XP98/99 Rim used with 954 Strike	111	
33A/35A-GBK-R	1/4" 33A/35A Rim	69	
33A/35A-GBK-SV	1/4" 33A/35A Surface Vertical	98	
33A/35A-GBK-CV	1/4" 33A/35A Concealed Vertical	69	
22GBK-R	1/4" 22 Rim	69	2.2
22GBK-SV	1/4" 22 Surface Vertical	98	2.4
22GBK-R-499F	1/4" 22 Rim used with 499-F Strike	98	3.6

Prices subject to change without notice.

Von Duprin Mullions are furnished for flat sills.
Strikes are not included except where indicated.
When required, strikes should be ordered with devices.

Steel Mullions

Model No.	Description	For Openings Up To:	With KR option For Openings Up To:	SP28 SP313	Weight lbs.
1654	Prepped for two 1606 Strikes - If 1606 strikes are not specified on your order, two 1606 strikes will be added per mullion. Each 1606 strike is **$67 list**.	7' 2"	7' 6"	596	28
		8' 2"	8' 6"	645	33
		10' 2"	10' 6"	746	41
4754	Prepped for two 4263 Monitor Strikes	7' 2"	7' 6"	825	30
		8' 2"	8' 6"	873	35
		10' 2"	10' 6"	968	43
4854	Prepped for one 299 strike and one 6111 Electric Strike. Advise Handing of Electric Strike Prep.	7' 2"	7' 6"	825	30
		8' 2"	8' 6"	873	35
		10' 2"	10' 6"	968	43
4954	Prepped for two 299 Strikes	7' 2"	7' 6"	596	28
		8' 2"	8' 6"	645	33
		10' 2"	10' 6"	746	41
4954-XP	Prepped for two 909 Strikes, for the XP device.	7' 2"	7' 6"	596	28
		8' 2"	8' 6"	645	33
		10' 2"	10' 6"	746	41
* **9854**	Prepped for one 499F and one 6111 Electric Strike or one 268 Strike and one 6111 Electric Strike. **Advise handing of Electric Strike Prep.**	7' 3"	7' 5"	1151	32
		8' 3"	8' 5"	1199	40
		10' 3"	10' 5"	1298	48
* **9954**	Prepped for two 499F or 268 Strikes	7' 3"	7' 5"	925	33
		8' 3"	8' 5"	972	38
		10' 3"	10' 5"	1069	46
9954-XP	Prepped for two 954 Strikes, for the XP device.	7' 3"	7' 5"	925	33
		8' 3"	8' 5"	972	38
		10' 3"	10' 5"	1069	46

* When used with 22, 98 or 99 Series Rim Devices and 499F strikes are not ordered with devices, two 499F strikes per 9954 and one per 9854 will be added. Each 499F strike is **$182 list**.

Aluminum Mullions

Furnished with Stabilizers and Weatherstripping

Model No.	Description	For Openings Up To:	US4, US10 US28 313	315	Weight lbs.
5654	Prepped for two 299 Strikes	7' 2"	1383	1661	17
		8' 2"	1479	1756	20
		10' 2"	1756	2078	25
5654-XP	Prepped for two 909 Strikes, for the XP device.	7' 2"	1383	1661	17
		8' 2"	1479	1756	20
		10' 2"	1756	2078	25
5754	Prepped for a 1408 Double Strike Price includes strike. Note: If 5754 is ordered w/device - Specify device L/strike	7' 2"	1658	1937	17
		8' 2"	1748	2030	20
		10'2"	1937	2036	25

REFERENCE NOTES:
Mullions are furnished standard for 7'0 doors when door height is not specified.
Blank Mullions (without strike preparation) are available at the same price as standard Mullions.
The 9854 and 9954 are U.L. Fire approved for heights up to 8'0" with 22-F and 88-F Rim Device. For door heights over 8'0" mullion is furnished less U.L. label.
The 9854 and 9954 are U.L. Fire approved for heights up to 10'0" with 98/99-F Rim Device. For door heights over 10'0" mullion is furnished less U.L. label.
ADA centerline height of 37" is available at no additional charge, must be specified.
Special Centerlines (other than 39-11/16") or **Special Length** mullions, see page 18 for pricing.

Prices subject to change without notice.

Mullions (continued)

Steel Mullion Options and Accessories

Model No.	Description	SP28 SP313
KR	Keyed Removable option - Prefix Mullion model with "KR"	
	KR1654/4954 List Add to Mullion price	500
	KR98/9954/4754/4854 List Add to Mullion price	550
KR54	Keyed Removable Kit for 1654 and 4954 Mullions	500
KR54-F	Keyed Removable Kit for 98/9954/4754/4854 Mullion	550
MT54	Wall Mounted Storage Kit "specify part number 050581"	159
154	Mullion Stabilizers (set of four, 2 attaches to the mullion and 2 to the door)	97

Aluminum Mullion Accessories

	Part Number	All Finishes
Mullion Angle Bracket - For Narrow Transom Bars	050092-00	58

Rod and Latch Guard

For use with all Von Duprin Surface Vertical rod devices.
Specify Handing.

Model No.	Description	Part Number	US32D
RG-27	Rod and Latch Guard	050061-32 (RHR), 050062-32 (LHR)	466
RG-27-3	Rod and Latch Guard Extended 3' Door	050261-32 (RHR), 050262-32 (LHR)	969
RG-27-4	Rod And Latch Guard Extended 4' Door	050263-32 (RHR), 050264-32 (LHR)	1254
RGO	Rod Guard Only	050066-32 (NON-HANDED)	290
LGO	Latch Guard Only	050067-32 (RHR), 050068-32 (LHR)	170
LGO-3	Latch Guard Only Extended 3' Door	050265-32 (RHR), 050266-32 (LHR)	691
LGO-4	Latch Guard Only Extended 4' Door	050267-32 (RHR), 050268-32 (LHR)	969

Mortise Locks

For panic and fire-rated mortise lock devices

Model No.	Description	US32D	US3, US4, US19, US10, US10B, US32	Weight lbs.
7500	Standard Mortise Lock	661	682	3.5
7500-2	Double Cylinder Mortise Lock	863	884	3.5
7500-IN	INPACT Device Mortise Lock	821	843	3.5

Prices subject to change without notice.

Price includes 304L Strike. Cylinders are not included.
Can not be used on doors requiring panic or fire exit hardware.

UL Listing: Two-and Three-point Locks and Latches (for Fire Doors) – UL 10 C.
Rating: 3HR Pairs (Double Egress), 90 Min. Pairs (Swing Same Direction), Door Size: 8'0 x 8'0 Pairs (Hollow Metal only)
Windstorm Rating: UL–FEMA 320 and **361** certified: 4'0 x 8'0 Single Doors (Non-fire-rated) Hollow Metal, 8'0 x 8'0 Pairs Hollow Metal. **UL –ANSI/ICC 500** certified for F5 Tornado applications.
These products are listed with Steelcraft PW14 Series door for Tornado Listings.

Outswing Door (RHR and LHR)

Function	Model No.	Push	Pull	US10B US26D	US10	US4	US3 US26
Exit Only	**237EO**	237 BE	None	2753	2753	2643	2816
Class room	**237L**	237 BE	378 w/cyl	3483	3525	3274	3609
Passage	**237L-BE**	237 BE	378 BE	3448	3495	3230	3567
Storeroom	**237L-NL**	237 BE	378 NL	3483	3525	3274	3609

- Windstorm-rated 237 outswing only
- If cylinder is required on push side, add suffix "C" to model #. (e.g. 237EO-C)
- Cylinder (mortise 3215) not included in pricing.
- The #06 Lever is furnished standard.
- Optional lever designs, #03 and #17 are available at no additional charge

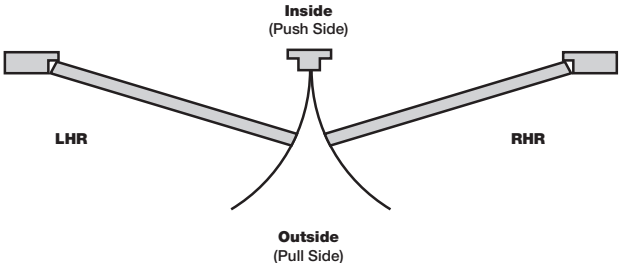

Inswing Door (RH and LH)

Function	Model No.	Push	Pull	US10B US26D	US10	US4	US3 US26
Exit Only	**237EO**	None	237 BE	2753	2753	2643	2816
Class room	**237L**	378 w/cyl	237 BE	3483	3525	3274	3609
Passage	**237L-BE**	378 BE	237 BE	3448	3495	3230	3567
Storeroom	**237L-NL**	378-NL	237 BE	3483	3525	3274	3609

- Windstorm-rated 237 outswing only
- If cylinder is required on pull side, add suffix "C" to model #. (e.g. 237EO-C)
- Cylinder (mortise 3215) not included in pricing.
- The #06 Lever is furnished standard.
- Optional lever designs, #03 and #17 are available at no additional charge.

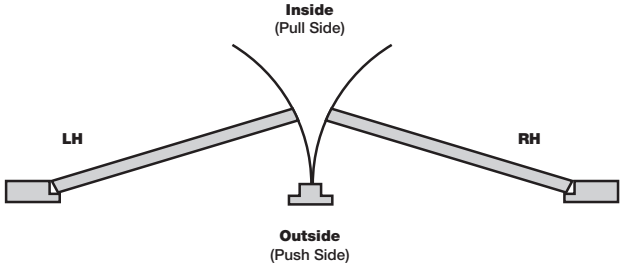

How to order:

237 EO **RHR** **06** **26D**

Model
EO / L / L-BE / L-NL
Handing
LHR / RHR / LH / RH
Lever Style
03 / 06 / 17
Finish
US3 / US4 / US10 / US10B / US26 / US26D

Prices subject to change without notice.

Extension Rod Kits

Model	Description	List Price All Finishes
ER-12-88	12" Extension Rod for 8827	29
ER-24-88	24" Extension Rod for 8827	29
ER-36-22/33A/99	36" Extension Rod for 2227, 3327A, 3527A, 9827, 9857, 9927, 9957	29
ER-12-WS	12" Extension Rod for WS98/9927	29
ER-ADJ10-55/88	Adjustable Extension Rod, over 8' up to 10' for 5547, 5547WDC, 8847	29
ER-ADJ10-33A/99	Adjustable Extension Rod, 8'4" - 10' for 3347A , 3348A , 3547A , 3548A , 9847 , 9847WDC , 9848 , 9947 , 9947WDC , 9948	29
ER-ADJ9.8-94	Adjustable Extension Rod, over 8' up to 9'8" for 9447, 9547	29

Extension Rod Kits (for non-standard door heights)

Fire rated devices over 8' may be provided less UL label based on the door application.
Caution: Other special door and frame conditions may require additional charges. Consult factory

Model	Description	UnFinished	US15 US26D US32D	313 US10B	US10	US4	US3 US26 US32	315	643E SPBLK
ER-36-88	36" Extension Rod for 8827	—	89	136	100	85	305	—	305
ER-48-88	48" Extension Rod for 8827	—	104	151	121	100	320	—	320
ER-60-33A	60" Extension Rod for 3327A, 3527A	—	270	270	313	305	325	325	—
ER-60-99	60" Extension Rod for 9827, 9857, 9927, 9957	—	139	139	258	170	272	272	—
ER-ADJ11.8-33A/99	Adjustable Extension Rod, 10' - 11'8" for 3347A, 3547A, 9847, 9847WDC, 9848, 9947, 9947WDC, 9948	96	—	—	—	—	—	—	—
ER-ADJ13.4-33A/99	Adjustable Extension Rod 11'8" - 13'4" for 3347A, 3547A, 9847, 9847WDC, 9848, 9947, 9947WDC, 9948	108	—	—	—	—	—	—	—
ER-ADJ15-33A/99	Adjustable Extension Rod, 13'4" - 15' for 3347A, 3547A, 9847, 9847WDC, 9848, 9947, 9947WDC, 9948	108	—	—	—	—	—	—	—
ER-ADJ12-5547	Adjustable Extension Rod 10' - 12' for 5547	95	—	—	—	—	—	—	—
ER-ADJ14-5547	Adjustable Extension Rod 12' - 14' for 5547	95	—	—	—	—	—	—	—
ER-ADJ16-5547	Adjustable Extension Rod, 14' - 16' for 5547	95	—	—	—	—	—	—	—
ER-ADJ12-5547WDC	Adjustable Extension Rod 10' - 12' for 5547WDC	209	—	—	—	—	—	—	—
ER-ADJ14-5547WDC	Adjustable Extension Rod 12' - 14' for 5547WDC	209	—	—	—	—	—	—	—
ER-ADJ16-5547WDC	Adjustable Extension Rod, 14' - 16' for 5547WDC	209	—	—	—	—	—	—	—
ER-ADJ12-5547F	Adjustable Extension Rod 10' - 12' for 5547-F, 8847-F	201	—	—	—	—	—	—	—
ER-ADJ14-5547F	Adjustable Extension Rod 12' - 14' for 5547-F, 8847-F	201	—	—	—	—	—	—	—
ER-ADJ16-5547F	Adjustable Extension Rod, 14' - 16' for 5547-F, 8847-F	201	—	—	—	—	—	—	—

One Piece Top Rod Kits

Fire rated devices over 8' may be provided less UL label based on the door application.
Caution: Other special door and frame conditions may require additional charges. Consult factory.

Model	Description	US26D	313	US10	US4	US3 US26	315	SPBLK
OP-8-88	8 - for door heights up to 8' for 8827	134	191	207	207	415	—	415
OP-8-99	8 - for door heights up to 8' for 9827, 9857, 9927, 9957	232	232	148	117	232	232	—
OP-10-99	10' - for door heights up to 10' for 9827, 9857, 9927, 9957	256	256	162	142	251	251	—
OP-12-99	12 - for door heights up to 12' for 9827, 9857, 9927, 9957	272	272	180	167	282	282	—

Prices subject to change without notice.

Security Screw Packages

Security Screws are pin-in-socket type and require special hex wrenches

	All Finishes	Wrench Model# Required
Devices		
22/22-F Rim	15	2
2227/2227-F	53	2
33A/35A Rim	27	2
33A/3527A	71	2
33/3547A/47A-F	39	2
88/88-F Rim/8875/75-F	45	2
8827	69	2
8827-F	102	2
8847-F	54	2
98/99/99-F/98-F Rim/98/9975/75-F	54	2
98/9927/27-F	64	2
98/9947/47-F and WDC	52	2
Trims and Controls		
230/880/990	13	2
230/990x330/350	45	2
386/360L-DTx330/350	21	2
371/373	30	2
374/376/377	13	2
696/697	12	2
696/697x330/350	27	2
Mechanical Strikes		
1439/1606/248L-4/264/266/299/299F	13	2
1408	25	2
268	22	2
338	11	2
385A	9	2
499F	40	2
575/576	12	2
Other Mechanical Products		
330/350 Pushbar	27	2
1654/4954 Mullion	38	2
5654/5754 Mullion	20	2
9954 Mullion	88	2, 4
154 Mullion Stabilizer	31	2
7500 Lock	12	2
Electrical Products		
4263/4570/4582/4690 Monitor Strike	12	2
4570/4690 Monitor Strike	12	2
4670 Monitor Strike	12	2
6211-16/6222-26 Electric Strike	11	2
EPT	64	2

Wrenches (One set of required wrenches charged per order unless specified otherwise)

Model No.	Description	Part Number	List Each
#1	1/8" Hex - #6 Screw	010060-00	20
#2	5/32" Hex - #8-1/4 Screw	010059-00	20
#3	7/32" Hex - 3/8 Screw	010061-00	20
#4	3/16" Hex - 5/16 Screw	010062-00	20

Prices subject to change without notice.

Sex Bolts

Machine screws are supplied with the Device.

Model No.	Thread Size		List Price
425	10-24	Package of 2	24
625	12-24	Package of 2	24
325	1/4-20	Package of 2	24
525	12-24	Package of 2	24
825	10-24	Package of 2	24

REFERENCE NOTES:
625 and 825 sexbolts furnished standard for 1 3/4" thick door. Specify 2 1/4" if required.

SLM Blocking Mounting Packages

For use with devices on doors with special high density blocking material.
Blocking material must be UL or Warnock Hersey approved.

Type	Unfinished	US3, US4, US10B US32D, US32
98/99 Rim	22	—
9827/9927	29	—
9875/9975/9847WDC/9947WDC/9850WDC/9950WDC	12	—
88 Rim	—	33
8827	—	60
8875	—	33
5547WDC	—	40
RG-27	29	—
RGO	12	—
LGO	12	—

Prices subject to change without notice.

Electrical Products

Prices subject to change without notice.

Alarm Kits

Model No.	US15	SP28 SP313	US4 US28 US10 313	US32D	US3 US26 315	Weight lbs.
22 ALK	—	548	—	—	—	2.2
33A-ALK	—	—	617	—	617	1.1
35A-ALK	617	—	617	—	617	1.1
98 ALK	617	—	617	651	617	1.1
99 ALK	—	—	617	—	617	1.1

OPTIONS:
Connector (CON) is a cross-category solution using common interconnect components for electrified options.
Available for ALK at no additional charge. Specify CON.

REFERENCE NOTES:
Above prices include switch kit - "RX" is standard, "LX" is optional at no charge. To order "Less Switch", **deduct $249 list**.
When ordering alarm kits separate from devices, the 3' device kit is furnished standard. Specify 4' if required, no additional charge.
The "EI" External Inhibit feature is standard on the ALK at no additional charge.

Mortise Locks

Model No.	Description	US32D	US3, US4, US19, US10, US10B, US32	Wt. lbs.
7500	Standard Mortise Lock	661	682	3.5
7500-2	Double Cylinder Mortise Lock	863	884	3.5
7500-IN	INPACT Device Mortise Lock	821	843	3.5
E7500	Electric Unlocking Mortise Lock	1278	1299	3.5
SS7500	Signal Switch Mortise Lock	910	931	3.5
SS7500-IN	94/9575 Signal Switch Mortise Lock	1070	1092	3.5

E7500 Notes:

Voltage/Current - furnished standard 24VDC if not specified. 12VDC available at no additional charge.
AC requires SO-12 or SO-24 Rectifier Kit, specify voltage/current 24VAC or 12VAC, **$42 list add**.
Fail Mode - specify FAIL-SECURE (FSE) or FAIL SAFE (FS).
Functions - available for use with "TP", "K" or "L" functions only.
Connector (CON) - is a cross-category solution using common interconnect components for electrified options.
Available for E7500 and SS7500 at no additional charge. Specify CON.

See catalog section on SS7500 or E7500 for required accessory equipment.

Prices subject to change without notice.

Switches

Model No.	Part No.	List Price Non-Finished
RX Switch Kit	050251-00	249
WP-RX-AUX Waterproof Switch Kit	051881-00	358
RX-LC Switch Kit	050281-00	288
RX-2 Switch Kit	050270-00	309
RX-Aux Switch Kit	050271-00	258
LX Switch Kit 3' Device	050254-00	249
LX Switch Kit 4' Device	050255-00	249
LX-LC Switch Kit 3' Device	050283-00	288
LX-LC Switch Kit 4' Device	050285-00	288
EL-LX Switch Kit	050247-00	249
EL-LX-LC Switch Kit	050287-00	288
LX-RX Switch Kit 3' Device	050256-00	376
LX-RX Switch Kit 4' Device	050257-00	376
LX-RX-LC Switch Kit 3' Device[a]	050289-00	450
LX-RX-LC Switch Kit 4' Device	050291-00	450
EL-LX-RX Switch Kit	050259-00	376
EL-LX-RX-LC Switch Kit	050293-00	450
LX 94/95 Switch Kit (After 4/2005)	050226-00	249

Consult technical support for details.

Delayed Exit System

Designed to meet NFPA 101 "Special Locking Arrangement" applications

Note: A complete system requires several components not included with controller. Consult catalog for details.

Model No.	Description	List Price
* **DE5300**	Logic Controller 15 Second Delay furnished standard.	971

* OVER 15 SECOND DELAY REQUIRES A LETTER OF APPROVAL FROM THE AUTHORITY HAVING LOCAL JURISDICTION OVER THE PREMISES PRIOR TO THE INSTALLATION OF THE DEVICE. ALLEGION CANNOT GRANT SUCH APPROVAL NOR DOES IT WARRANT LOCAL JURISDICTION COMPLIANCE.

✓ **0 Delay**	0 Second Delay	133
✓ **30 Delay**	30 Second Delay	133
✓ **BOCA-15 Delay**	15 second delay with BOCA Modification	133
✓ **BOCA-30 Delay**	30 second delay with BOCA Modification	133

✓ Consult factory for lead time.

Interface Boxes/Relays

Model No.		List Price
JB7	Enclosure with terminal strip. Optional relays are available for factory or field installation	670
Factory Installed		List add per Interface Box
R1	24VDC SPDT	291
R2	24VDC DPDT	291
R3	24VDC DPDT Delay on Make Time Delay	479
R4	24VDC DPDT Delay on Break Time Delay	479
Parts (Field Installable)		Each Price
Relay Kit R5	24VDC SPDT.	291
Relay Kit R6	24VDC DPDT.	291
Relay Kit R7	24VDC DPDT. Delay on Make Time Delay	479
Relay Kit R8	24VDC DPDT. Delay on Break Time Delay	479

Prices subject to change without notice.

Allegion Connect - Wire Harnesses

Allegion Connect Harnesses - Prices listed are net, discounting does not apply		
Part Number	**Description**	**Price Each**
Harnesses with Molex Connectors on both ends (for use with Hollow Metal Doors)		
CON-6	6" Wire Harness (internal p/n 106190-00)	**$10.50**
CON-12	12" Wire Harness (internal p/n 106191-00)	**14.00**
CON-26	26" Wire Harness (internal p/n 106192-00)	**15.80**
CON-32	32" Wire Harness (internal p/n 106193-00)	**16.90**
CON-38	38" Wire Harness (internal p/n 106194-00)	**18.50**
CON-44	44" Wire Harness (internal p/n 106195-00)	**18.00**
CON-50	50" Wire Harness (internal p/n 106196-00)	**18.50**
CON-192	192" Wire Harness (internal p/n 106197-00)	**44.20**
Harnesses with Molex Connector on one end, crimped pins on other w/ attachable Molex connector (for use with Wood Doors)		
CON-6P	6" Wire Harness (internal p/n 106201-00)	**$13.40**
CON-12P	12" Wire Harness (internal p/n 106202-00)	**16.90**
CON-26P	26" Wire Harness (internal p/n 106203-00)	**18.50**
CON-32P	32" Wire Harness (internal p/n 106204-00)	**19.80**
CON-38P	38" Wire Harness (internal p/n 106205-00)	**20.30**
CON-44P	44" Wire Harness (internal p/n 106206-00)	**20.90**
CON-50P	50" Wire Harness (internal p/n 106207-00)	**21.50**
CON-192P	192" Wire Harness (internal p/n 106208-00)	**46.50**
Harness with Molex Connector on one end, stripped leads on other (for connection to power supply)		
CON-6W	6" extension to power supply (internal p/n 106210-00)	**$13.40**
Service Kit		
CON-KIT	Connector Service Kit (internal p/n 050823-00-00) contains: -100 each male & female terminals -10 each 4-pin and 8-pin male connectors -10 each 4-pin and 8-pin female connectors - 1 extraction tool"	**$111.00**

Electric Power Transfers

Model No.		SP28	SP313	Weight lbs.
EPT 2	Two 18 gauge wires	471	471	2.5
EPT 10	Ten 24 gauge wires	499	499	2.5
BAA	**"Buy America Act" compliant EPT option** will be labeled as "Assembled in the U.S.A. with U.S. and foreign materials"	N/C		
CON	Connector (CON) is a cross category solution using common interconnect compoents for electrified options. Available for EPT10. Specify CON.	11	11	

Prices subject to change without notice.

Standard Features

- UL294 Listed for Access Control
- Class 2 rated power limited output *
- Universal 120-240 VAC Input
- Regulated and filtered DC outputs
- AC input, battery and DC output LED indicators
- Plug and play connectors for optional distribution boards
- AC input status indication on outside cover
- AC monitoring
- 14" H x 12" W x 4" D enclosure

* PS906 is Class 2 when used with 900-8P option board

1. Select Power Supply

Model	Description	List Price
PS902	Base Power Supply (2A @ 12/24 VDC- field selectable) (approx. weight: 9 lbs) -PS902 is able to accept a total of one optional distribution board, plus one fire alarm relay along with one battery backup board and up to two 7A/hr batteries	252
PS904	Base Power Supply (4A @ 12/24 VDC- field selectable) (approx. weight: 11 lbs) - PS904 is able to accept a total of two optional distribution boards, plus one battery backup board and up to two 7A/hr batteries	477
PS906	Base Power Supply (6A @ 12/24 VDC- field selectable) (approx. weight: 7 lbs) - PS906 is able to accept a total three optional distribution boards or two optional boards with battery backup board and two 7A/hr batteries	738
PS914	Base Power Supply (4A w/ 16A inrush @ 12/24 VDC- field selectable) (approx. weight: 9 lbs) - PS914 is able to accept a total of two optional boards, plus one battery backup board and two 7A/hr batteries	722
PS914RFK	The PS914RFK allows the retrofit of the PS914 into an existing PS873 cabinet.	846
BAA	"Buy America Act" compliant power supply option will be labeled as "Assembled in the U.S.A. with U.S. and foreign materials"	39

When specifying power supply with "EL" or "QEL" Electric Latch Retraction devices, the 2RS is furnished when board option is not specified.

2. Select Optional Distribution Board with or without FA (Fire Alarm Relay)

Model	Description	Part #	List Price
900-4R	Independently controlled relays	44489912-00	170
900-4R-FA	Independently controlled relays with FA		232
900-2RS	2 Relay board output	44489896-00	173
900-2RS-FA	2 Relay board output with FA		235
900-4RL	4 Relay board integrated logic for controlling security interlocks, auto operators and time delays	44489920-00	467
900-4RL-FA	4 Relay board integrated logic for controlling security interlocks, auto operators and time delays with FA		529
900-8F	8 fuse protected outputs	44489946-00	62
900-8F-FA	8 fuse protected outputs with FA		124
900-8P	8 PTC protected outputs	44489938-00	62
900-8P-FA	8 PTC protected outputs with FA		124
900-BBK	Battery Backup Kit (includes two 7A/hr batteries)	44489961-00	244
900-BB	Battery Backup board only (sold separately)	44489953-00	122
900-BAT	Batteries only - (two 7A/hr batteries, sold separately)	44487155-00	122

* For field installation, use model number. Example: 900-2RS.

3. Select Other Power Supply Options

Model	Description	Part #	List Price
900-FA	Fire Alarm Relay (EIR) module is a plug-in relay to provide an interface with fire or other emergency override systems PS902: may be installed directly on power supply or may be used with optional distribution boards PS904, PS906, PS914: must be used with optional distribution boards. If an optional board is not listed the 900-8F-FA will be provided.	44487247-00	62
900-KL	Key Lock Cover (not available with BAA)	44486850-00	39

Note: PS902, PS904, PS 906 and PS914 power supplies require connection to AC line voltage. Installation and all electrical connections (high and low voltage) should be performed by a qualified electrical contractor.

Prices subject to change without notice.

Electric Strikes

How to Order:

		Optional		Optional			Optional	
Model	Power failure mode	Dual switch	Voltage	Rectifier kit	Shim	Finish	Buzzer	Allegion connect
1	2	3	4	5	6	7	8	9
Specify for:	6100 6200	6100 6200	6100 6200	4200 5100 6100 6200 6300 6400	6100 6300	5100 6100 6200	4200 5100 6100 6200 6300 6400	6100 6200

4200 Series Electric Strikes for cylindrical and deadlatch locks

Features

- Field selectable fail-safe/fail-secure without dissassembly
- Dual voltage: 12 VDC at 200 mA / 24 VDC at 100 mA
- Compatible with all Schlage and Falcon cylindrical locks as well as cylindrical and deadlatch locks of many other manufacturers
- Meets ANSI/BHMA 156.31 Grade 1 endurance & dynamic strength
- Meets ANSI/BHMA 156.31 Grade 2 static strength

Model	Fire Rated	Throw	Hollow Metal	Wood	Alumi-num	Single	Mullion Pair		BHMA 630 US32D
4211		1/2"-3/4"	■		■	■		Shallow 1-3/8" backbox depth	**193**
4212		1/2"-5/8"	■		■	■		Includes latchbolt monitor. Shallow backbox.	**232**
Options (please specify):									
S012	Rectifier Kit							Converts 12 VAC to 12 VDC	**42**
S024	Rectifier Kit							Converts 24 VAC to 24 VDC	**42**
EB	Entry Buzzer							Use in fail-secure applications	**41**
090110	Faceplate, Round Corner							Additional faceplate option, square corner is standard in the box, both in BHMA 630/US32D satin stainless steel finish	**19**

Refer to the Electric Strike Parts section for a complete list of available parts.

5100 Series Electric Strike for cylindrical and deadlatch locks

Features

- Adjustable keeper improves fit on tight door preps
- Field selectable fail-safe/fail-secure
- Dual voltage: 12 VDC at 380 mA / 24 VDC at 190 mA
- Compatible with Schlage and Falcon cylindrical and deadlatch locks including those of many other manufacturers
- UL 1034 burglary-resistant

Model	Fire Rated	Throw	Hollow Metal	Wood	Alumi-num	Single	Mullion Pair		BHMA 689 US SP28	BHMA 622 US19	BHMA 695 US SP313
5100-3FP		1/2"-5/8"	■	■	■	■		3 faceplates included with hardware for an all-in-one boxed solution	**250**	**250**	**250**
Options (please specify):											
S012	Rectifier Kit							Converts 12 VAC to 12 VDC			**42**
S024	Rectifier Kit							Converts 24 VAC to 24 VDC			**42**
EB	Entry Buzzer							Use in fail-secure applications			**41**

Refer to the Electric Strike Parts section for a complete list of available parts.

Prices subject to change without notice.

6100 Series Electric Strikes for rim exit devices

Features

- Furnished standard in fail secure configuration unless specified fail safe (see options)
- 24 VDC supplied standard if not specified otherwise (see options)
- Compatible with Von Duprin and Falcon rim exit devices and those of many other manufacturers
- UL10C fire rated (fail secure only)
- UL1034 burglary-resistant

Model	Fire Rated	Throw	Hollow Metal	Wood	Alumi-num	Single	Mullion Pair		BHMA 605 US3	BHMA 606 US4	BHMA 612 US10	BHMA 613 US10B	BHMA 629 US32	BHMA 630 US32D
6111	■	3/4"	■	■	■	■	■	Can use with vertical rod exit devices	**1034**	**877**	**905**	**905**	**937**	**866**
6112	■	3/4"	■	■	■	■		Designed to replace FA 310-5 with minor frame modification	**993**	**811**	**859**	**859**	**831**	**811**
6113	■	3/4"	■	■	■	■		Retrofits VD 3011, 3021	**1020**	**866**	**881**	**881**	**881**	**866**
6114		3/4"	■		■	■		Surface applied for use with rim nightlatch devices	**973**	**881**	**919**	**919**	**850**	**838**
6121		3/4"	■	■	■		*	*For rim exit devices on double doors without mullion	**1541**	**1207**	**1319**	**1319**	**1305**	**1207**

For Options please see list under 6200 Series section.
Also, refer to the Electric Strike Parts section for a complete list of available parts.

6200 Series Electric Strikes for mortise or cylindrical locks

Features

- Furnished standard in fail secure configuration unless specified fail safe (see options)
- 24 VDC supplied standard if not specified otherwise (see options)
- Compatible with mortise (without deadbolt) and cylindrical lock applications except where noted
- ANSI/BHMA 156.31 Grade 1: 6211, 6211AL and 6211WF
- UL10C fire rated (fail secure only)
- UL1034 burglary-resistant

Model	Fire Rated	Throw	Hollow Metal	Wood	Alumi-num	Single	Mullion Pair		BHMA 605 US3	BHMA 606 US4	BHMA 612 US10	BHMA 613 US10B	BHMA 629 US32	BHMA 630 US32D
6210	■	3/4"	■		■	■		Mortise only. Includes strike pocket inserts for deadlocking triggers	**969**	**789**	**865**	**865**	**897**	**789**
6211	■	3/4"	■		■	■		Retrofits VD 3140 or FA 712	**878**	**752**	**789**	**789**	**754**	**744**
6211AL	■	3/4"			■	■		Retrofits FA 722	**928**	**773**	**837**	**837**	**781**	**773**
6211WF	■	3/4"		■		■		Retrofits FA 732 with minor frame modification	**878**	**752**	**789**	**789**	**754**	**752**
6212	■	3/4"	■		■	■		Fits modified ANSI 115.2 cutout. Retrofits VD 3146.	**986**	**881**	**933**	**933**	**941**	**881**
6212WF	■	3/4"		■		■			**986**	**881**	**933**	**933**	**941**	**881**
6213	■	3/4"	■	Retrofits only	■	■		Retrofits VD 3041, 3042, 3061 and 3062	**993**	**848**	**885**	**885**	**885**	**848**
6214	■	3/4"	■		■	■		Retrofits FA 310-2 3/4	**993**	**957**	**994**	**994**	**985**	**968**
6215	■	3/4"	■		■	■		Retrofits FA 310-2	**994**	**868**	**919**	**919**	**881**	**867**
6216	■	3/4"	■	■	■	■		Retrofits FA 310-3-1. For mortise with manually operated deadbolt - 1" throw.	**1373**	**1102**	**1155**	**1155**	**1113**	**1102**
6221	■	3/4"	■	■	■		■	Retrofits VD 3071 and 3072. 4-3/4" minimum stile required	**1079**	**973**	**1026**	**1026**	**1046**	**973**
6222	■	3/4"	■		■		■	Retrofits FA 310-2 3/4 OB	**1511**	**1231**	**1280**	**1280**	**1231**	**1231**
6223	■	3/4"	■	■	■		■	Retrofits VD 3091 and 3092. 4-3/4" minimum stile required	**993**	**829**	**885**	**885**	**885**	**829**
6224	■	3/4"	■		■		■	Retrofits FA 310-2 3/4. For door thicknesses 1-3/4" or 2-1/4"	**1159**	**969**	**1007**	**1007**	**997**	**981**
6224AL	■	3/4"			■		■	Retrofits FA 310-2RF. For door thicknesses 1-3/4" or 2-1/4"	**1196**	**994**	**1052**	**1052**	**1007**	**994**
6225	■	3/4"	■		■		■	Retrofits FA 310-2 OB	**1307**	**1162**	**1207**	**1207**	**1231**	**1162**
6226	■	3/4"	■		■		■	Retrofits FA 310-2. For door thicknesses 1-3/4" or 2-1/4"	**993**	**829**	**877**	**877**	**839**	**829**

Options (please specify):			
FS	Fail Safe	Fail secure (FSE) is standard unless FS is specified	**40**
DS	Dual monitor switch	For latch bolt and lock status. Not available on 6221, 6222 & 6225	**197**
DS-LC	Low current dual monitor switch	For latch bolt and lock status. 50 mA or less at 24 VDC	**197**
S012	Rectifier Kit	Converts 12 VAC to 12 VDC (For 16 VAC current, use S024 rectifier kit)	**42**
S024	Rectifier Kit	Converts 24 VAC to 24 VDC	**42**
SHIM	Shim for blade stop applications	Available as specified item with 6111 and 6113 only	**166**
EB	Entry Buzzer	Use in fail-secure applications	**41**
CON	Allegion Connect	6" wire extension harness connector	**N/C**

Refer to the Electric Strike Parts section for a complete list of available parts.

Electric Strikes

6300 Series Surface Mount Electric Strike for rim exit devices

Features

- Dual voltage: 12 VDC at 500 mA / 24 VDC at 240 mA
- Compatible with most rim exit devices
- UL 1034, UL 294, CSFM
- UL 10C 3-hour fire rated (fail secure only)

Model	Fire Rated	Throw	Hollow Metal	Wood	Alumi-num	Single	Mullion Pair		BHMA 630 US32D
6300	■	up to 3/4"	■	■	■	■	■	No cut, surface mount design	**745**
Options (please specify):									
SHIM		Shim for blade stop applications						Can be ordered separately as part 050804-00	**63**
S012		Rectifier Kit Converts 12 VAC to 12 VDC							**42**
S024		Rectifier Kit Converts 24 VAC to 24 VDC							**42**
EB		Entry Buzzer Use in fail-secure applications							**41**
Included with strike: two plug-in voltage connectors, mounting template, spacer plate, mounting screws, and hex wrench.									
Refer to the Electric Strike Parts section for a complete list of available parts.									

6400 Series Modular Electric Strike for mortise or cylindrical locks

Features

- Dual voltage: 12 VDC at 375 mA / 24 VDC at 190 mA
- Modular options fit cylindrical and nearly any mortise lock.
- Includes movable deadbolt keeper, plug and deadlatch ramp inserts.
- ANSI/BHMA 156.31 Grade 1
- UL 1034, UL 294, CSFM
- 3-hour fire rated to UL 10C (fail secure only)

Model	Fire Rated	Throw	Hollow Metal	Wood	Alumi-num	Single	Mullion Pair		BHMA 630 US32D
6400	■	up to 3/4"	■	■	■	■		Up to 1" deadbolt throw (as night latch only)	**524**
Options (please specify):									
LM6400		Latch Monitor						Optional plug-in latch monitor can be added in the field	**56**
S012		Rectifier Kit Converts 12 VAC to 12 VDC							**42**
S024		Rectifier Kit Converts 24 VAC to 24 VDC							**42**
EB		Entry Buzzer Use in fail-secure applications							**41**
Included with strike: two plug-in voltage connectors, self-adhesive template for frame cuts, trim filler plate, mounting tabs and shims, as well as tamper-resistant screws with a security driver bit.									
Refer to the Electric Strike Parts section for a complete list of available parts.									

Monitor Strikes

Model No.		US26D	US10B	US4 US10	US3 US26	Weight lbs.
4263-T1	For Rim type exit device as per catalog	400	400	384	423	2.1
4263-T3	For Rim type exit device as per catalog	400	400	384	423	2.1
4268-T1	For Rim type exit device as per catalog	525	525	525	554	2
4582-T1	For Mortise Locks as per catalog - **specify handing**	440	440	400	461	2
4582-T2	For Mortise Locks as per catalog - **specify handing**	440	440	400	461	2
4570-T1	For Cylindrical/Mortise Locks as per catalog	440	440	400	461	2
4670-T1	For Cylindrical Locks as per catalog	400	400	384	423	2
4690-T2	For Single 3347A, 3547A, 9847, and 9947	639	639	578	662	2.1
4690-T2-1	Special Twin for 3347A and 3547A Device (2 1/4" cc)	1180	1180	1078	1180	2

Schlage® Electronic Exit Trim

AD Series Electronic Exit Trim is available on XP98/99 and Series 98/99 for rim, mortise, surface vertical, and concealed vertical rod/ concealed vertical cable, and Series 22/22F for rim and surface vertical rod devices. For AD-300/400 network trim the Von Duprin RX-LC switch (part #050281) must be used or the warranty is void.

Four communication options:

– AD-200 993 Offline, access rights stored on lock.
– AD-250 993 Offline, access rights on stored magnetic stripe credential.
– AD-300 993 Networked Hardwire Locks
– AD-400 993 Networked Wireless Locks

For complete pricing information refer to Schlage Electronic Security Price Book #010056.
NOTE: CVR/CVC trim is available only on metal doors.

Prices subject to change without notice.

Von Duprin Parts Prices

Prices subject to change without notice.

Index

Numerical Index 114-117
22 Series 118-119
33A/35A Series 120-124
33A/3549A Series 125
33/3550AWDC Series 126
330/350 Series 127
55 Series 128-130
88 Series 131-136
98/99 Series 137-142
98/9949 Series 143
98/9950WDC Series 144
XP98/99 Series 145
INPACT Series 94/95 146
7500 Mortise Lock 147
Controls Series 360/370 148-150
Trims 151-156
Mullions 157
Screw Packs/ Shims/ Miscellaneous 158
Maintenance Kit and Replacement Packages 159
Electric Strikes 160-163
Electric Accessories 164-166
GUARD-X 167
Service Replacement Items 168
Part Number Cross Reference 169-170

Numerical Index

Part No.	Page	Part No.	Page	Part No.	Page	Part No.	Page	Part No.	Page	Part No.	Page
010055	163	040079	138	050006	148, 153	050046	159	050128	122, 141	050192	128
010057	163	040080	138	050007	148, 153	050047	122, 141	050130	157	050193	128
010058	163	040081	138	050008	148, 153	050048	122, 141	050132	120, 138	050194	128
010059	158	040082	138	050009	148, 153	050053	130	050133	120, 127	050195	128
010060	158	040083	138	050010	148, 153	050054	157	050134	138	050196	129
010061	158	040084	138	050011	161	050070	164	050135	157	050197	129
010062	158	040085	138	050012	148, 153	050071	137	050136	129	050198	129
012014	164	040086	165	050013	148, 153	050072	137	050137	129	050199	129
032114	152	040087	165	050014	120, 127, 139	050073	137	050139	129	050200	131
033022	134	040088	165	050015	161	050078	164	050140	127, 151, 154	050201	131
033024	168	040089	165	050016	161	050090	119, 141, 168	050141	127, 151, 154	050202	131
040000	129	040091	165	050017	148, 153	050091	119, 141, 168	050142	127, 156	050209	133
040001	129	040092	165	050018	161	050093	136	050143	127, 156	050210	133
040061	164	040093	138	050019	132	050096	130	050148	151	050211	133
040062	164	040094	138	050020	137	050101	131	050154	168	050212	147
040063	164	040169	165	050021	137	050102	131	050155	168	050213	147
040064	164	040170	165	050022	137	050103	131	050156	150, 151, 154	050214	147
040065	164	040171	156	050023	137	050104	131	050157	168	050215	147
040066	164	040188	165	050024	137	050105	128	050168	157	050218	168
040067	164	040189	165	050025	137	050106	131	050169	157	050226	165
040068	164	040191	140, 165	050026	137	050107	131	050171	122, 141	050237	163
040070	120	040192	165	050027	137	050108	131	050183	128	050239	163
040071	120	040193	165	050028	137	050109	120, 127	050184	128	050240	163
040072	120	040198	140, 165	050029	137	050110	130	050185	128	050241	157
040073	120	040199	140, 165	050030	137	050112	129	050186	128	050242	163
040074	120	050001	148, 153	050031	162	050114	120, 138	050187	128	050247	165
040075	120	050002	148, 153	050032	162	050115	120, 138	050188	128	050251	165
040076	120	050003	148, 153	050033	162	050117	120, 138	050189	128	050254	165
040077	120	050004	129, 133	050034	163	050122	168	050190	157	050255	165
040078	138	050005	129, 133	050036	130	050124	168	050191	128	050256	165

Prices subject to change without notice.

Part No.	Page
050257	165
050259	165
050260	132
050270	165
050271	165
050273	132
050274	132
050275	132
050276	132
050277	135
050278	130, 135
050279	135
050281	165
050285	165
050286	165
050287	165
050289	165
050291	165
050293	165
050327	135
050328	135
050330	157
050331	132, 133
050332	128
050333	128, 129
050334	128
050335	157
050352	128
050353	128
050354	128
050355	128
050356	128
050357	128
050358	129
050359	129
050360	129
050362	129
050363	129
050364	129
050366	129
050367	130
050368	130
050369	130
050370	130
050371	157
050372	130
050373	130
050374	130
050379	167
050381	157
050383	157
050384	164
050385	164
050386	137
050387	137
050388	137
050389	137
050390	157
050391	157
050392	157
050393	132
050397	168
050398	124
050399	124
050400	119, 122, 141
050401	119, 122, 141
050402	119, 122, 141
050403	120
050404	120
050405	120
050406	120
050407	120
050409	131
050410	131
050411	131
050412	131
050413	131
050414	131
050415	131
050416	131
050417	131
050418	131
050419	131
050420	131
050421	131
050422	131
050423	131
050424	131
050425	131
050426	131
050427	131
050428	131
050429	131
050430	131
050431	131
050432	131
050433	131
050434	131
050435	134
050436	134
050437	134
050438	134
050439	134
050440	134
050441	134
050442	134
050443	134
050444	134
050445	134
050446	133
050447	131
050448	133
050449	133
050451	134
050452	134
050453	136
050454	136
050455	136
050456	136
050457	130, 136
050458	130, 136
050459	129, 133
050460	135
050461	135
050462	135
050463	135
050464	135
050465	135
050466	135
050467	135
050468	135
050469	135
050471	135
050472	135
050473	135
050474	120
050475	120
050476	134
050477	134
050478	135
050479	135
050480	135
050481	135
050482	136
050483	120
050484	120
050485	120
050486	121
050487	121
050488	121
050489	121
050491	121, 140
050492	122, 141, 146
050493	122, 141, 146
050494	122, 141
050495	122, 141
050496	122
050497	132
050498	132
050499	132
050500	132
050501	132
050502	132
050503	132
050504	132
050505	132
050506	132
050508	132
050509	122, 141
050512	123, 142
050513	123, 142
050514	123, 142
050515	123, 142
050516	122, 141
050519	123
050520	123
050522	122, 141
050523	122, 141
050524	120, 127, 139
050525	166
050526	150, 151, 157
050529	118, 120, 138
050531	121, 140, 164
050532	121, 140, 164
050533	140, 165
050534	121, 140, 164
050535	121, 140, 164
050536	121, 140, 164
050537	121, 140, 164
050538	121, 140, 164
050539	121, 140, 164
050540	121, 140, 147, 164
050541	122, 140, 164
050542	122, 140, 164
050543	122, 140, 164
050544	122, 140, 165
050545	122, 140, 165
050546	119, 122, 141
050547	119, 142
050548	137
050549	137
050550	137
050551	137
050552	137
050553	137
050554	137
050555	137
050556	137
050557	137
050558	137
050559	137
050560	137
050562	137
050563	137
050564	138
050565	138
050566	119, 141
050569	138
050570	138
050572	138
050573	138
050574	142
050575	142
050576	150
050579	150, 155
050580	157
050581	157
050582	142
050583	142
050584	151
050585	146
050587	150
050588	138
050589	138
050592	149
050593	149
050595	149
050596	149
050597	149
050598	149
050599	150
050600	150
050601	150
050602	150
050603	150
050604	150
050605	150
050606	150
050607	150
050608	150
050609	150
050611	150, 151, 155
050612	150
050613	150, 152
050614	150, 152
050615	150
050616	150
050619	150
050621	150
050622	123, 142
050623	123, 142
050624	123, 142
050631	130
050632	130
050633	130
050634	130, 136
050635	130, 136
050636	130, 136
050639	130
050640	130
050641	130
050642	142
050643	123
050644	142
050645	123
050650	123, 142
050651	123, 142
050652	123, 142
050653	123, 142
050654	123, 142
050655	123, 142
050656	130
050660	136
050661	136
050662	136
050663	136
050671	155, 166
050672	155, 166
050673	155, 166
050675	145
050676	145
050689	145
050690	145
050691	145
050692	145
050699	163
050709	168
050732	153
050733	153
050734	153
050735	153
050736	153
050737	153
050738	153
050739	153
050740	153
050741	153
050742	153
050743	166
050744	166
050749	163
050750	148
050751	148
050752	148
050753	148
050754	148
050755	148
050756	148
050757	148
050758	148
050759	148
050760	148
050761	148
050762	148
050763	148
050764	148
050765	148
050766	138
050767	138
050768	138
050769	138
050770	138
050771	138
050772	138
050773	138
050803	163
050804	163
050805	162, 163
050813	151
050814	155
050819	163
050823	166
050831	137
050832	137
050853	164
050854	164
050855	164
050856	164
050883	137
050884	137
050885	137
050886	137
050939	163
050940	163
050941	163
050942	163
050943	163
050996-622	158
051701	136
051703	136
051704	130
051705	130, 136
051707	130
051802	142
051804	119
051807	123
051808	123, 142, 146
051810	142
051811	123
051812	142
051823	164
051824	164
051825	164
051826	164
051827	164
051828	164
051841	142
051842	142
051860	125
051861	149
051862	154
051863	149
051864	154
051865	149
051866	154
051867	149
051868	154
051869	149
051870	154
051871	148
051872	153
051873	148
051874	153
051881	165
051883	137
051884	137
051914	149
051915	154
051916	149
051917	154
051918	149
051919	154
051920	148
051921	154
051922	149
051923	154
051924	149
051925	154
051926	149
051927	154
051928	149
051929	154
051930	149
051931	154
051932	149
051933	154
051934	149
051935	154
051936	149
051937	154

Prices subject to change without notice.

Numerical Index

Part No.	Page
051938	149
051939	154
090001	132
090002	132
090003	134
090004	134
090005	118, 121, 129, 134, 140
090006	134
090007	134
090008	129, 134
090009	132
090010	136
090011	130, 136
090012	133
090013	133
090014	133
090015	132
090016	133
090017	132
090018	130, 136
090020	129, 134
090021	129, 134
090022	128
090023	128
090024	128, 129
090025	128
090026	128, 129
090027	129
090028	129
090029	129
090030	130
090031	120, 138, 159
090032	130
090033	130
090034	130
090035	130
090036	120, 166
090037	121, 140
090038	119, 121, 140
090039	119, 121, 140
090040	119, 120, 121, 140
090041	119, 121, 140
090042	119, 121, 140
090043	119, 121, 140
090044	119, 121, 140
090047	127
090048	119, 127, 140
090049	120, 127, 139, 159
090050	128
090051	128, 129
090052	129
090053	129
090054	119, 123, 142
090056	119, 122, 141, 159
090057	119, 122, 141
090059	123, 141, 159
090060	168
090061	123, 141
090062	168
090063	123, 141
090064	123, 141
090065	119, 123, 141, 159
090066	123, 141
090067	119, 124, 142
090068	119, 124, 142
090069	124, 142
090070	124, 142
090071	123, 142
090072	123, 142
090073	159
090074	118, 138, 159
090075	119, 142
090076	119, 122, 141, 159
090077	118
090079	118, 138
090080	134
090081	129, 134
090082	134
090083	134
090084	168
090085	118, 121, 129, 134, 140
090088	140
090090	150
090091	150
090092	150
090093	150
090094	150
090095	150
090096	150
090097	150
090098	150
090099	150
090100	150
090101	150
090102	150
090103	150, 151, 154
090104	151
090105	151
090106	151
090107	118, 120, 138, 146, 159
090108	158
090110	162
090114	162
090599	145
090600	145
090601	145
090602	145
090794	145
090795	145
090796	145
090797	145
090943	165
091030	168
091031	168
091032	168
091061	168
091080	168
091082	168
091091	158
100315	130
100316	130
100741	130, 136
101023	137
101024	137
101025	142
101026	142
101030	166
101212	152
103865	134
103866	129
105100	166
105140	136
105144	130
105952	123
105987	157
105988	157
106181	147
106182	166
106183	166
106187	164
106190	166
106191	166
106192	166
106193	166
106194	166
106195	166
106196	166
106197	166
106198	164
106201	166
106202	166
106203	166
106204	166
106205	166
106206	166
106207	166
106208	166
106210	166
106222	124, 142, 146
107765	135
108490	168
108493	168
108705	152
109012	118
109111	150
109112	148
109113	168
109115	148
109118	168
109126	148
109127	148
109130	156
109132	148
109133	148
109324	123, 141, 146
109347	147
109361	119
109362	119
109366	148
109367	148
109369	156
109773	147
109871	151
109872	151
109873	151
109879	151
109915	118
110343	151
110360	165
110388	121, 140, 164
110537	155
110544	152
110547	152
110744	147
110768	155
110769	155
111244	160
111246	160
111247	160
111250	160
111251	160
111264	160
111711	160
111712	160
111713	160
111714	160
111715	161
111716	161
111717	161
111718	161
111719	160
111720	160
111721	160
111722	160
111723	160
111724	160
111725	160
111726	160
111727	161
111728	161
111729	161
111730	161
111731	161
111732	161
111733	161
111734	161
111735	161
111736	161
111737	161
111738	161
111739	161
111740	161
111741	161
111742	161
111743	160
111744	160
111745	160
111746	160
111747	160
111748	160
111749	160
111750	160
111751	160
111752	160
111753	160
111754	160
111755	160
111756	160
111757	160
111758	160
111759	161
111760	161
111761	161
111762	161
111763	161
111764	161
111765	161
111766	161
111813	160
111814	160
111869	155
111943	147
112063	119, 142
112409	138
112455	138
112456	138
112462	155
112754	160
112755	160
112756	161
112757	161
112758	161
112759	161
112760	160
112761	160
112762	160
112763	160
112764	161
112765	161
112766	161
112767	161
112768	161
112769	161
112770	161
112771	161
112772	160
112773	160
112774	160
112775	160
112776	160
112777	160
112778	160
112779	160
112780	161
112781	161
112782	161
112783	161
112784	160
112785	160
112835	167
112843	148
112844	167
112845	167
112868	123, 141
113100	138
113101	138
113232	163
113781	140, 165
113782	140, 165
113853	132
114140	147
114141	130, 135
114294	147
114317	164
114320	164
114810	148
114811	154
114812	148
114813	154
114814	149
114815	154
114816	149
114817	154
114818	149
114819	154
114820	149
114821	154
114822	149
114823	154
114824	149
114825	154
114826	149
114827	154
114828	149
114829	154
114830	149
114831	154
114832	149
114833	154
114834	149
114835	154
114836	149
114837	154
114838	149
114839	154
114840	149
114841	154
114842	149
114843	154
114844	149
114845	154
114846	149
114847	154
114848	149
114849	154
114850	149
114851	154
114852	149
114853	154
114984	138
116549	164
116717	165
117000	120
661481	158
900241	141
900242	141
900252	158
900253	158
900254	158
900263	158
900281	158
900284	158
900285	158
900288	162
900289	158
900290	162
900292	163
900297	145
900344	163
900345	162, 163
900347	163
900390	156
900392	118
900393	118
900397	118
900400	157
900402	157
900409	157
900410	157
900411	157
900413	157
900416-00	120, 138
900424	145
900425	145
900426	145
900427	145
900501	135
900502	130, 135
900503	132, 133, 134
900504	132, 133, 134
900505	132, 133, 134
900506	132, 133, 134
900507	128, 129
900508	128
900509	129
900512	128, 129
900514	128, 129
900521	141
900522	141
900523	141
900524	141
900531	152
900532	147, 158
900533	152
900534	136
900539	128
900541	130, 136

Prices subject to change without notice.

Part No.	Page
900542	152
900555	150
900556	150
900558	148
900559	148
900564	168
900565	123
900569	168
900576	130, 135
900581	151
900582	148
900583	168
900584	163
900589	119, 122, 141
900597	120, 139
900610	132
900613	132
900614	130, 135
900615	133
900619	120
900620	124, 142
900622	150
900624	151
900626	146
900760	152
900761	152
900771	152
900772	152
900776	152
900782	152
900783	152
900784	152
900807	150
900808	150
900809	150
900810	150
900820	158
900835	127
900836	127
900839	156
900840	156
900847	158
900848	158
900849	158
900850	119, 122, 135, 141
900852	135
900853	155
900856	120, 141
900870	162
900871	141
900881	162
900882	162
900883	150
900884	150
900885	162
900888	158
900892	120, 138
900894	151
900898	142
900901	168
900919	119, 142
900920	155
900954	155
900955	151
900966	162
900973	122
900978	166
900980	122, 141
900981	118
945521	158
952820	152
956760	152, 155
957901	120
958002	164
958003	164
958004	164
958005	164
959055	152
959056	152
959560	152
959563	152
959575	152, 155, 156
959603	152, 155, 156
959952	158
959953	158
960003	152
960012	158
960060	152
960109	152
960316	152
960317	152
960676	152
960689	152
960902	152, 156
960921	156
961047	157
961084	158
961180	152
961267	153, 155, 156
961280	152
961530	158
963011	153
963074	158
963080	147
963105	155
963150	168
963196	153
963579	153, 155
963581	152
963584	168
963585	168
963703	153, 156
963704	153, 156
963712	168
963767	155
963873	168
963902	168
963905	168
963909	168
963954	147
963984	147
964013	119
964019	163
964035	147
964037	163
964070	162
964097	155
964183	155
964190	162
964285	155
964330	147
964334	151
964353	155
964355	156
964375	168
964390	147
965130	156
965226	153, 155
965237	153, 155
965310	152
965312	152
965317	152
965409	118
965568	153
965712	157
965713	157
965714	157
966268	118
966671	158
966985	152
967269	158
967291	152
967329	156
967333	158
967341	136
967480	150
967704	166
968112	168
968116	168
968201	151, 155
968592	118
968595	118
968596	118
968603	118
968645	157
968668	147
968694	156
968713	163
968716	162
968748	147
968761	147
968763	147
968765	147
968766	147
968770	147
968773	147
968793	147
968883	153
968888	118
968918	156
968935	147
968938	134
968939	147
969012	155
969089	147
969091	156
969092	156
969107	147
969126	118
969127	118
969140	151
969157	151
969280	158
969349	166
969350	166
969352	151
969353	153, 155
969354	166
969364	147
969545	155
969584	162
969610	147
969889	138, 168
969903	151
969904	151
969906	151
969908	151
969909	151
969910	151
970035	118
970036	118
970117	155
970137	153
970138	153
970139	153
970159	153, 155
970188	147
970271	162
970272	162
970274	162
970276	162
970278	162
970280	162
970300	162
970301	162
970302	162
970303	162
970305	162
970306	162
970310	162
970318	147
970321	158
970323	158
970384	163
970387	163
970388	163
970407	162
970412	163
970415	162
970472	158
970488	153, 155, 156
970491	156
970531	147
970546	147
970594	166
970735	147
970861	147
970862	147
970872	147
970978	124, 142
970979	151
971010	158
971012	155
971015	155
971132	155
971187	157
971198	162
971212	157
971245	151
971249	151
971257	151
971259	151
971312	157
971313	157
971316	157
971320	147
971328	157
971340	157
971385	162
971415	162
971417	162
971440	155
971470	118
971471	118
971497	151
971556	166
971557	166
971573	155
971585	155
971593	152
971614	168
971655	146
971656	146
971659	146
971664	146
971706	146
971709	146
971710	146
971712	146
971763	146
971764	146
971765	146
971766	146
971822	147
971832	147
972466	152, 155, 156
972467	152, 155, 156
972471	164
972549	147
990132	163
990637	166
23946429	125, 143
23946437	125, 143
23946445	143
23946460	125
24052979	125, 143
24086860	137
24086894	137
24090110	125, 143
24090128	125, 143
24090136	125
24090144	143
24090706	125, 143
24230914	125, 143
24231516	125
24231516	143
24647265	126, 144
24647273	126, 144
24647281	126, 144
24647299	126, 144
24648180	126, 144
24685505	126, 144
24685554	144
24685562	126
44487155	166
44489870	166
47250175	125, 143
47250176	125, 143
47250177	125, 143
47250178	125, 143
47250179	125, 143
47250180	125, 143
47250398	125, 143
47250403	125, 143
47250968	125, 143
47259557	125
47259560	124, 142
47260610	142
47263418	124, 142
48968820	126, 144
48968838	126, 144
48968861	144
48968879	126
48968887	126, 144
48973291	144
48973309	126
49000391	126, 144
49000409	126, 144
472529557	142
BRKT.121	167
BRKT.131	146
CABLE.10038	155, 166
CASE.107	118, 146
COVER.109	167
COVER.114	167
COVER.115	167
COVER.116	167
COVER.121	167
COVER.122	167
ECAP.105	167
ECAP.115	146
KIT.1001	146
KIT.1002	146
PBKIT.1001	118
PBKIT.1002	118
PBKIT.1003	118
PBKIT.1004	118
PCB.10018	167
PCB.10019	167
PCB.10020	167
PIPE.101	167
PKGMTG.1001	146
PKGMTG.1002	167
PKGMTG.1003	167
PKGMTG.1004	162
PKGMTG.1005	162
PKGSCR.1001	167
PKGSCR.1003	162
PKGSCR.1004	162
PKGSRV.1007	159
PKGSRV.1010	159
PKGSRV.1011	159
PKGSRV.1012	159
PKGSRV.1013	159
PKGSRV.1015	159
PKGSRV.1016	159
PKGSRV.1018	130, 159
PKGSRV.1019	159
PKGSRV.1020	159
PKGSRV.1022	159
PKGSRV.1023	159
PKGSRV.1024	159
RODASY.121	146
RODASY.122	146
SIGN-1	166
SIGN.1001	167
SIGN.1002	167
SIGN.1003	167

Prices subject to change without notice.

Description	Part. No.	List Price Non-Finished	SP28, SP313
Center Case			
22 Rim Center Case Less Cover	109012	294.00	–
2227/27-F Center Case Less Cover	CASE.107	236.00	–
22/22-F Center Case Cover	968603	–	55.00
2227/27-F Center Case Cover	968888	–	55.00
22 Center Case Cover Screw Pkg/4	090077	10.00	–
22 Series Mounting Package	900392	24.00	–
2227 Mounting Package	900393	31.00	–
Control Link Pin Kit (with Retaining Ring)	050529	12.00	–
Control Link Pin Ret. Ring Pkg/10	090107	12.00	–
NL Drive Screw Pkg/10	090074	20.00	–
2227 Latchbolt Pin Pkg/10	090079	12.00	–
22 Pushbar Stop	965409	12.00	–
Mechanism Case			
22 End Cap Kit	900981	20.00	–
22 End Cap Kit (Metal)	900397	30.00	–
22/2227 Cover Plate - 3' Dr	968595	–	53.00
22/2227 Cover Plate - 4' Dr	968596	–	53.00
22-F/2227-F Cover Plate - 4' Dr	969126	–	53.00
22-F/2227-F Cover Plate - 3' Dr	969127	–	53.00
22 ALK Cover Plate - 3' Dr	971470	–	53.00
22 ALK Cover Plate - 4' Dr	971471	–	53.00
22 Mechanism Case - 3' Dr	970035	–	188.00
22 Mechanism Case - 4' Dr	970036	–	199.00
227 Dog Key 5/32" Pkg/2	090005	20.00	–
227 Dog Key 5/32" Pkg/10	090085	71.00	–
Cover Plate Bearing Insert	968592	12.00	–
Touch Bar Cover Bearing Insert	966268	12.00	–
Push Bar			
22 Series Push Bar - 3' Dr SP28	PBKIT.1001	–	190.00
22 Series Push Bar - 3' Dr SP313	PBKIT.1002	–	190.00
22 Series Push Bar - 4' Dr SP28	PBKIT.1003	–	201.00
22 Series Push Bar - 4' Dr SP313	PBKIT.1004	–	201.00

Prices subject to change without notice.

Description	Part. No.	List Price Non-Finished	List Price SP28, SP313
Baseplate			
Baseplate Bumper Pkg/4	090038	11.00	–
Baseplate Return Spring Pkg/10	090039	12.00	–
Dogging Shaft Pkg/2	090040	12.00	–
Dogging Spring Pkg/2	090041	11.00	–
Dogging Adaptor Spring Pkg/2	090042	15.00	–
Dogging Adaptor Pkg/2	090043	12.00	–
Dogging Hook Pkg/2	090044	12.00	–
Baseplate Bearing Strip Pkg/2	090048	12.00	–
3/8 x 3/16 x 3/32 Washer	964013	12.00	–
Vertical Latches			
* 2227 Bottom Latch Retrofit Kit	050090	–	145.00
* 2227 Top Latch Retrofit Kit	050091	–	145.00
** 2227 Bottom Latch Kit Less Cover	050401	145.00	-
** 2227 Top Latch Kit Less Cover	050400	145.00	-
2227 PL Latch Kit Less Cover	050402	145.00	-
2227 Latch Case Cover	050566	-	54.00
2227 Latch Case Cover Screw Pkg	900850	-	12.00
** 2227 Latch Case Mtg. Bracket Kit	050546	29.00	–
2227 Top Latch Compression Spring Pkg/10	090056	12.00	–
2227 Top Latch Spring Pkg/10	090057	12.00	–
2227 Bolt Return Spring Pkg/10	090065	12.00	–
2227 Top Latch Aux. Bolt Spring Pkg/10	090076	12.00	–
** 2227 Latch Case Screw Pkg 1-3/4" Door	900589	12.00	–

* For Devices shipped before October 1998
** Devices Shipped after October 1998

Vertical Rods			
2227 Top Vertical Rod	109361	–	108.00
2227 Bottom Vertical Rod	109362	–	108.00
2227 Extension Rod 36" Kit	051804	–	29.00
2227 Rod Guide Package	112063	–	53.00
2227 Rod Guide Mtg. Package	900919	–	12.00
2227 Rod Connector - Latch Pkg/2	090067	20.00	–
2227 Rod Connector - Center Case Pkg/2	090068	20.00	–
2227 Top or Bottom Rod Connector	050547	10.00	–
2227 Rod Extension Connector Pkg/4	090075	13.00	–
2227 Rod Roll Pin Pkg/10	090054	13.00	–

Prices subject to change without notice.

33A/35A Series • Parts

Description	Part. No.	Non-Finished	List Price US28	US26D	313	US10	US4	US3, ✓US15, US26, 315
Center Case								
33A/35A Rim Center Case Kit L/Cover	050403	336.00	–	–	–	–	–	–
33/3527A Center Case Kit L/Cover	050404	336.00	–	–	–	–	–	–
33/3547A Center Case Kit L/Cover	050405	336.00	–	–	–	–	–	–
33A/35A-F Rim Center Case Kit L/Cover	117000	450.00	–	–	–	–	–	–
33A/35A Rim Center Case Cover Kit	050483	–	54.00	96.00	69.00	63.00	63.00	125.00
33/3527A Center Case Cover Kit	050484	–	54.00	96.00	69.00	63.00	63.00	125.00
33/3547A/49A Center Case Cover Kit	050485	–	54.00	96.00	69.00	63.00	63.00	125.00
33/35A Center Case Cover Screws	900892	–	12.00	12.00	12.00	12.00	12.00	12.00
Control Link Pin Kit (w/Retaining Ring)	050529	12.00	–	–	–	–	–	–
Control Link Pin Retaining Ring Pkg/10	**090107**	12.00	–	–	–	–	–	–
Control Link Pin Pkg/10	090031	15.00	–	–	–	–	–	–
33A/35A Device Mtg Package - 1 3/4" - 2 1/4" Dr	900619	12.00	–	–	–	–	–	–
33/3547A Wood Door Mtg Package	900856	12.00	–	–	–	–	–	–
Cover Plate / Conversion Kits								
33A Hex Dog Conversion Kit	**050114**	–	73.00	–	73.00	73.00	73.00	73.00
35A Hex Dog Conversion Kit	**050117**	–	73.00	–	73.00	73.00	73.00	73.00
33A CD Conversion Kit	**050115**	–	97.00	–	97.00	97.00	97.00	97.00
35A CD Conversion Kit	**050132**	–	97.00	–	97.00	97.00	97.00	97.00
33A CDSI Kit 3'/4'	040070/040071	–	319.00	319.00	319.00	319.00	319.00	319.00
33A HDSI Kit 3'/4	040072/040073	–	230.00	230.00	230.00	230.00	230.00	230.00
35A CDSI Kit 3'/4	040074/040075	–	319.00	319.00	319.00	319.00	319.00	319.00
35A HDSI Kit 3'/4	040076/040077	–	230.00	230.00	230.00	230.00	230.00	230.00
CDSI/HDSI Configuration Pkg	900416-00	16.00	–	–	–	–	–	–
33A Fire or Less Dogging Cover Plate Kit	050133	–	45.00	–	45.00	45.00	45.00	45.00
35A Fire or Less Dogging Cover Plate Kit	050109	–	45.00	–	45.00	45.00	45.00	45.00
33A ALK Cover Plate Kit	050406	–	107.00	–	107.00	107.00	107.00	107.00
35A ALK Cover Plate Kit	050407	–	107.00	–	107.00	107.00	107.00	107.00
33A Center Case Cover Plate (1.42")	050474	–	29.00	–	29.00	29.00	29.00	29.00
35A Center Case Cover Plate (1.42")	050475	–	29.00	–	29.00	29.00	29.00	29.00
Cover Plate Anti-Rattle Spring Pkg/10	**090036**	12.00	–	–	–	–	–	–
Dogging Shaft Pkg/2	090040	12.00	–	–	–	–	–	–
End Cap								
33A/35A Impact Resistant End Cap Kit	050014	–	81.00	89.00	81.00	100.00	90.00	90.00
33A/35A Impact Resistant End Cap Scr Pkg	900597	–	–	12.00	12.00	15.00	12.00	12.00
33A/35A Impact Resistant End Cap Bracket	050524	11.00	–	–	–	–	–	–
33A/35A-F Impact Resistant End Cap Kit	957901	–	77.00	85.00	77.00	96.00	87.00	87.00
Push Bar								
* 33A/35A Push Bar Retrofit Kit - 3' Dr	**See Note**	–	208.00	246.00	226.00	336.00	325.00	384.00
* 33A/35A Push Bar Retrofit Kit - 4' Dr	**See Note**	–	224.00	270.00	242.00	351.00	336.00	398.00
33A/35A Push Bar Guide Pkg/10	**090049**	13.00	–	–	–	–	–	–

* **Note:** To order, specify device type, size, finish. Example: PBKIT 33A 3' US28
✓ US15 finish available with Series 35A, only

Items in **Bold print** indicate same part number is used for the old 33/35 series devices.

Prices subject to change without notice.

Description	Part. No.	Non-Finished	US28	US26D	313	US10	US4	US3, ✓US15, US26, 315
			List Price					
Mechanism Case								
33A Mechanism Case - 3' Dr	**050486**	–	145.00	–	181.00	181.00	181.00	206.00
33A Mechanism Case - 4' Dr	**050487**	–	206.00	–	237.00	237.00	237.00	268.00
35A Mechanism Case - 3' Dr	**050488**	–	145.00	–	181.00	181.00	181.00	206.00
35A Mechanism Case - 4' Dr	**050489**	–	206.00	–	237.00	237.00	237.00	268.00
CD/SS Cylinder Mtg Kit	**107813**	–	–	60.00	63.00	63.00	63.00	69.00
CD/SS Cylinder Locating Washer Pkg	**050490**	15.00	–	–	–	–	–	–
CD/SS Mortise Cylinder Collar Pkg	**050525**	–	–	45.00	45.00	54.00	45.00	54.00
CD/SS Cylinder Lock Nut Pkg	**050526**	13.00	–	–	–	–	–	–
CD Actuator Pkg/2	**090045**	12.00	–	–	–	–	–	–
* CD Dogging Plug Pkg/2	**090046**	11.00	–	–	–	–	–	–
227 Dog Key 5/32" Pkg/2	**090005**	20.00	–	–	–	–	–	–
227 Dog Key 5/32" Pkg/10	**090085**	71.00	–	–	–	–	–	–
Mechanism Case Brkt Kit	**050530**	10.00	–	–	–	–	–	–
Mechanism Case Brkt Screw Pkg/10	**090073**	10.00	–	–	–	–	–	–
33A/35A Device Mtg Pkg 1 3/4" - 2 1/4" Door	900619	12.00	–	–	–	–	–	–
33A/35A Device Mtg Pkg 2 1/4" - 2 3/4"	900380	89.00	–	–	–	–	–	–
33A/35A Device Mtg Pkg 2 3/4" - 3 1/4"	900429	89.00	–	–	–	–	–	–
33A/35A Device Mtg Pkg 3 1/4" - 4 1/4"	900430	89.00	–	–	–	–	–	–
33/3547A Wood Door Mtg Pkg	900856	12.00	–	–	–	–	–	–

* Devices shipped after July 1997

Baseplate								
Shock Absorber Pkg	**050491**	31.00	–	–	–	–	–	–
Baseplate Screw Pkg/10	**090037**	11.00	–	–	–	–	–	–
Baseplate Bumper Pkg/4	**090038**	11.00	–	–	–	–	–	–
Baseplate Return Spring Pkg/10	**090039**	12.00	–	–	–	–	–	–
Dogging Shaft Pkg/2	**090040**	12.00	–	–	–	–	–	–
Dogging Spring Pkg/2	**090041**	11.00	–	–	–	–	–	–
Dogging Adaptor Spring Pkg/2	**090042**	15.00	–	–	–	–	–	–
Dogging Adaptor Pkg/2	**090043**	12.00	–	–	–	–	–	–
Dogging Hook Pkg/2	**090044**	12.00	–	–	–	–	–	–
227 Dog Key 5/32" Pkg/2	**090005**	20.00	–	–	–	–	–	–
227 Dog Key 5/32" Pkg/10	**090085**	71.00	–	–	–	–	–	–
EL Dogging Rod Kit - 3'	**050531**	60.00	–	–	–	–	–	–
EL Dogging Rod Kit - 4'	**050532**	60.00	–	–	–	–	–	–
EL 6' Cable and Connector	**110388**	46.00	–	–	–	–	–	–
EL Potted Circuit Breaker	**050534**	305.00	–	–	–	–	–	–
EL Solenoid/Plunger	**050535**	337.00	–	–	–	–	–	–
HD-EL Solenoid	**050536**	337.00	–	–	–	–	–	–
HD-EL Solenoid Plunger	**050537**	124.00	–	–	–	–	–	–
EL Dogging Rod Retainer	**050538**	13.00	–	–	–	–	–	–
EL Receptacle Connector	**050539**	12.00	–	–	–	–	–	–
EL Female Terminal	**050540**	12.00	–	–	–	–	–	–

✓ US15 finish available with Series 35A, only

Items in **Bold print** indicate same part number is used for the old 33/35 Series devices.

Prices subject to change without notice.

Description	Part. No.	Non-Finished	List Price US28	US26D	313	US10	US4	US3, ✓US15, US26, 315
Baseplate (continued)								
HD-EL Dog Screw	**050541**	15.00	–	–	–	–	–	–
HD-EL Solenoid Bracket	**050542**	27.00	–	–	–	–	–	–
HD-EL Dogging Spring	**050543**	15.00	–	–	–	–	–	–
SS Cable	**050544**	136.00	–	–	–	–	–	–
SS Housing	**050545**	454.00	–	–	–	–	–	–
Vertical Latches								
33/3527A Top Latch Kit Less Cover	050400	145.00	–	–	–	–	–	–
33/3527A Bottom Latch Kit Less Cover	050401	145.00	–	–	–	–	–	–
33/3527A Pullman Latch Kit Less Cover	050402	145.00	–	–	–	–	–	–
33/3547A Top Latch Kit	**050492**	282.00	–	–	–	–	–	–
33/3547A Bottom Latch Kit	**050493**	229.00	–	–	–	–	–	–
ES33/3547A Top Latch Kit	**050128**	206.00	–	–	–	–	–	–
* 33/3548A Top Latch Kit-(non EL)	**050494**	412.00	–	–	–	–	–	–
* EL33/3548A Top Latch Kit	**050516**	389.00	–	–	–	–	–	–
* 33/3548A Bottom Latch Kit	**050495**	443.00	–	–	–	–	–	–
33/3548A Latch Retrofit Kit-(non EL)	**050047**	690.00	–	–	–	–	–	–
33/3548A-F Latch Retrofit Kit-(non EL)	**050048**	690.00	–	–	–	–	–	–
EL33/3548A Latch Retrofit Kit	**050522**	690.00	–	–	–	–	–	–
EL33/3548A-F Latch Retrofit Kit	**050523**	690.00	–	–	–	–	–	–
33/3527A Latch Cover Kit w/Screws	050496	–	77.00	131.00	87.00	77.00	77.00	133.00
33/3527A Latch Cover Screw Pkg	**900850**	–	12.00	12.00	12.00	12.00	12.00	12.00
33/3527A Top Latch Compression Spring Pkg/10	090056	12.00	–	–	–	–	–	–
33/3527A PL Top Latch Spring Pkg/10	090057	12.00	–	–	–	–	–	–
33/3527A Top Latch Aux. Bolt Spring Pkg/10	090076	12.00	–	–	–	–	–	–
33/3527A-F AFL Strike Hole Plug	050509	11.00	–	–	–	–	–	–
33/3527A Latch Mtg Bracket Kit	050546	29.00	–	–	–	–	–	–
33/3527A Latch Screw Pkg	900589	12.00	–	–	–	–	–	–
33/3527A-F LBR Latch Mounting Package	900980	11.00	–	–	–	–	–	–
LBR Fire Latch/Strike Kit	050171	459.00	–	–	–	–	–	–
LBR Strike Plug & Screw Package	900973	12.00	–	–	–	–	–	–

* For service replacement only. Refer to Retrofit Kits 050047, 050048, 050522 and 050523 to convert 33/3547, 33/3547A Device to 33/3548 OR 33A/3548A.
✓ US15 finish available with Series 35A, only

Items in **Bold print** indicate same part number is used for the old 33/35 Series devices.

Prices subject to change without notice.

Description	Part. No.	Non-Finished	List Price US28	US26D	313	US10	US4	US3, ✓US15, US26, 315
Vertical Latches								
33/3547A Latch Mounting Bracket Kit	**109324**	56.00	–	–	–	–	–	–
33/3548A Latch Mounting Bracket Kit	**112868**	63.00	–	–	–	–	–	–
33/3547A Latch Brkt Mtg. Screw (Latch) Pkg/6	**090059**	12.00	–	–	–	–	–	–
33/3547A Latch Brkt Mtg. Screw (Door) Pkg/6	**090061**	12.00	–	–	–	–	–	–
33/3547A/48A Latch Linkage Pin Retaining Ring Pkg/10	**090063**	12.00	–	–	–	–	–	–
33/3547A Latch Link Pin Pkg/10	**090064**	12.00	–	–	–	–	–	–
33/3547A Bolt Return Spring Pkg/10	**090065**	12.00	–	–	–	–	–	–
33/3547A Top Latch Compression Spring Pkg/10	**090066**	11.00	–	–	–	–	–	–
33/3547A Rod Connecting Screw-Latch Pkg/2	090071	15.00	–	–	–	–	–	–
33/3548A Rod Connecting Screw-Latch Pkg/2	090072	15.00	–	–	–	–	–	–
Vertical Rods								
3327A Top Rod Kit	050512	–	79.00	–	92.00	108.00	108.00	108.00
3527A Top Rod Kit	050513	–	79.00	92.00	92.00	108.00	108.00	108.00
3327A Bottom Rod Kit	050514	–	79.00	–	92.00	108.00	108.00	108.00
3527A Bottom Rod Kit	050515	–	79.00	–	92.00	108.00	108.00	108.00
33/3547A/48A Adj. Top Rod Kit - 6'8"-8'4" Dr	050519	92.00	–	–	–	–	–	–
33/3547A/48A Bottom Rod Kit	050520	92.00	–	–	–	–	–	–
3327A One Piece Top Rod Kit - 8'	050650	–	232.00	232.00	232.00	148.00	117.00	232.00
3327A One Piece Top Rod Kit - 10'	050651	–	256.00	256.00	256.00	162.00	142.00	251.00
3327A One Piece Top Rod Kit - 12'	050652	–	272.00	272.00	272.00	180.00	167.00	282.00
3527A One Piece Top Rod Kit - 8'	050653	–	232.00	232.00	232.00	148.00	117.00	232.00
3527A One Piece Top Rod Kit - 10'	050654	–	256.00	256.00	256.00	162.00	142.00	251.00
3527A One Piece Top Rod Kit - 12'	050655	–	272.00	272.00	272.00	180.00	167.00	282.00
3327A Extension Rod 36" Kit	051807	–	29.00	29.00	29.00	29.00	29.00	29.00
3527A Extension Rod 36" Kit	051811	–	29.00	29.00	29.00	29.00	29.00	29.00
3327A Extension Rod 60" Kit	050643	–	258.00	–	258.00	301.00	293.00	314.00
3527A Extension Rod 60" Kit	050645	–	258.00	–	258.00	301.00	293.00	314.00
33/3547A/48A Extension Rod Kit - Adj 8'4"-10'	**051808**	29.00	–	–	–	–	–	–
33/3547A/48A Extension Rod Kit - Adj 10'-11'8	050622	96.00	–	–	–	–	–	–
33/3547A/48A Extension Rod Kit - Adj 11'8-13'4	050623	108.00	–	–	–	–	–	–
33/3547A/48A Extension Rod Kit - Adj 13'4-15'	050624	108.00	–	–	–	–	–	–
33/3527A Rod Guide Pkg	**105952**	–	81.00	121.00	84.00	84.00	84.00	121.00
33/3527A Rod Guide Mtg Pkg	**900565**	12.00	–	–	–	–	–	–
33/3527A Rod Roll Pin Pkg/10	090054	13.00	–	–	–	–	–	–

Items in **Bold print** indicate same part number is used for the old 33/35 Series devices.

Prices subject to change without notice.

Description	Part. No.	Non-Finished	List Price US28	US26D	313	US10	US4	US3, ✓US15, US26, 315
Vertical Rods (continued)								
33/3527A Rod Connector-Latch Pkg/2	090067	20.00	–	–	–	–	–	–
33/3527A Rod Connector-C/Case Pkg/2	090068	20.00	–	–	–	–	–	–
33/3547A Ratchet Release Pkg	**106222**	–	136.00	–	136.00	136.00	136.00	–
33/3547A Ratchet Release Spacer 1/8"	970978	–	21.00	–	21.00	21.00	21.00	–
33/3547A Ratchet Lever Spring Pkg/2	**090069**	11.00	–	–	–	–	–	–
33/3547A Ratchet Release Screw Pkg/2	**090070**	15.00	–	–	–	–	–	–
33/3547A Rod Adjusting Pkg	900620	21.00	–	–	–	–	–	–
33/3547A 1/4" Insulclad Kit 1 3/4" Dr	050398	67.00	–	–	–	–	–	–
33/3547A 1/2" Insulclad Kit 1 3/4" Dr	050399	67.00	–	–	–	–	–	–

✓ US15 finish available with Series 35A, only

Quiet Mechanical Retrofit Kits

QM Rim Device Kit (98/99, 33A/35A)	47259560	185.00	–	–	–	–	–	–
QM SVR Device Kit (98/9927, 33/3527A)	47263418	185.00	–	–	–	–	–	–

Items in **Bold print** indicate same part number is used for the old 33/35 series devices.

Prices subject to change without notice.

Description		Non-Finished	List Price
Vertical Latches			
49 Top Latch Assembly		24090110	255.00
49 Bottom Latch Assembly		24090128	276.00
49 LBL-AFL Fire Pin Kit		051860	151.00
Centerslide Kits			
33/3549 Centerslide Kit		24090136	392.00
49 Cable*			
Top Cable Assembly	Door Opening Heights 6'0" to 6'10"	47250398	222.00
Top Cable Assembly	Door Opening Heights 6'10" to 8'0"	47250175	222.00
Top Cable Assembly	Door Opening Heights >8'0" to 9'2"	47250176	222.00
Top Cable Assembly	Door Opening Heights >9'2" to 10'4"	47250177	222.00
Bottom Cable Assembly	Door Opening Heights 6'0" to 6'10"	47250403	222.00
Bottom Cable Assembly	Door Opening Heights 6'10" to 8'0"	47250178	222.00
Bottom Cable Assembly	Door Opening Heights >8'0" to 9'2"	47250179	222.00
Bottom Cable Assembly	Door Opening Heights >9'2" to 10'4"	47250180	222.00
Replacement Cable Kit (10' core wire, end fitting, and sizing templates)		47250968	92.00

For door opening heights more than 10', consult factory.
Consult customer support for non-standard center lines or if a threshold is installed.
* For Complete 49 Cable System kits, see Page 37.

Mounting Packages			
49 Bottom Mounting Package		23946437	108.00
49 Top Mounting Package		23946429	97.00
33/3549A HM/AL Centerside Mounting Package		23946460	108.00
Misc.			
Cable Removal Tool - qty 1		24052979	14.00
Cable Removal Tool - Pkg/10		24090706	117.00
338 Filler Plate		24230914	88.00
Spacer Block Kit 3/4" undercut		24231516	30.00
Damper Assembly 996		47259557	62.00

Prices subject to change without notice.

33/3550AWDC Series • Parts

Description	Part. No.	List Price
Vertical Latches		
Top Latch Kit with mounting pack	48968820	358.00
Bottom Latch Kit with mounting pack	48968838	300.00
Centerslide Kits		
3350A-WDC Centerslide kit with mounting pack	48973309	588.00
Fire Kits		
33/3550AWDC-F Fire Kit (fire barrier, intumescent for scalp plate and barrier, mounting packs)	48968879	305.00
Mounting Kit		
Top, Bottom, and centerslide Mounting Pkg	24685505	31.00
Top Latch Mounting Kit	49000409	12.00
Bottom Latch Mounting Kit	49000391	12.00
Cables		
TOP CABLE 6'8"-7'0" WDC	24648180	54.00
TOP CABLE 7'1"-8'0" WDC	24647273	54.00
TOP CABLE 8'1"-9'0" WDC	24647281	61.00
TOP CABLE 9'1"-10'0" WDC	24647299	61.00
BOTTOM CABLE WDC	24647265	54.00
Fire Pin Kit		
50WDC Fire pin Kit (current fire pin, fire pin sleeve, fire pin strike)	48968887	162.00
Lift Finger Kit		
3350AWDC Lift Finger Kit	24685562	90.00

Prices subject to change without notice.

Description	Part. No.	Non-Finished	List Price US28	US26D	313	US10	US4	US3, US26, 315
End Cap								
330/350 End Cap Kit for Lock Stile	050014	–	81.00	89.00	81.00	100.00	90.00	90.00
RX330/350 End Cap Mtg Bracket for Lock Stile	050524	11.00	–	–	–	–	–	–
Push Bar								
* 33A/35A Push Bar Retrofit Kit - 3' Dr	See Note	–	208.00	246.00	226.00	336.00	325.00	384.00
* 33A/35A Push Bar Retrofit Kit - 4' Dr	See Note	–	224.00	270.00	242.00	351.00	336.00	398.00
33A/35A Push Bar Guide Pkg/10	090049	13.00	–	–	–	–	–	–

* **Note:** To order, specify device type, size, finish. Example: PBKIT 33A 3' US28
Push Bar Assemblies are for the SS & RX 330/350 only. Push bars can not be replaced on the standard 330/350 Dummy Push Bar.

33A Fire or Less Dogging Cover Plate Kit	050133	–	45.00	–	45.00	45.00	45.00	45.00
35A Fire or Less Dogging Cover Plate Kit	050109	–	45.00	–	45.00	45.00	45.00	45.00
RX/SS 330/350 Spacer Pkg/2	090047	27.00	–	–	–	–	–	–
RX/SS 330/350 Baseplate Bearing Strip Pkg/2	090048	12.00	–	–	–	–	–	–
Screw Packs								
330/350 Push Bar 1 3/4" Door	900835	12.00	–	–	–	–	–	–
330/350 Push Bar 2 1/4" Door	900836	12.00	–	–	–	–	–	–
230/990DT x 330/350 1 3/4" Dr	050140	–	–	15.00	15.00	15.00	15.00	15.00
230/990DT x 330/350 2 1/4" Dr	050141	–	–	15.00	15.00	15.00	15.00	15.00
696/697DT x 330/350 1 3/4" Dr	050142	–	–	15.00	15.00	15.00	15.00	15.00
696/697DT x 330/350 2 1/4" Dr	050143	–	–	15.00	15.00	15.00	15.00	15.00

Prices subject to change without notice.

Description	Part. No.	Non-Finished	List Price US10B, US26D	US10	US4	US3, US26, SPBLK
Center Case Kits (includes mounting screws)						
55EO Center Case Kit	050183	–	839.00	906.00	839.00	1,066.00
55NL Center Case Kit	050184	–	899.00	1,016.00	899.00	1,126.00
5575 Center Case RHR Kit	050185	–	535.00	596.00	535.00	682.00
5575 Center Case LHR Kit	050186	–	535.00	596.00	535.00	682.00
5575-F Center Case RHR Kit	050187	–	594.00	659.00	594.00	744.00
5575-F Center Case LHR Kit	050188	–	594.00	659.00	594.00	744.00
5547 RHR Center Case Kit	050189	–	535.00	596.00	535.00	682.00
5547 LHR Center Case Kit	050191	–	535.00	596.00	535.00	682.00
5547-F RHR Center Case Kit	050192	–	594.00	659.00	594.00	744.00
5547-F LHR Center Case Kit	050193	–	594.00	659.00	594.00	744.00
5547WDC RHR Center Case Kit	050194	–	594.00	659.00	594.00	744.00
5547WDC LHR Center Case Kit	050195	–	594.00	659.00	594.00	744.00
Center Case Parts - Rim						
55CK-NL Conversion Kit (Order Trim Separate)	050105	55.00	–	–	–	–
55 Rim Backplate w/Screws	050332	–	72.00	77.00	72.00	77.00
55 Case Bushing	050333	15.00	–	–	–	–
55 Rim Spring Clip w/Screws	050334	23.00	–	–	–	–
55 Rim Latch Bolt w/Axle and Spring	050352	158.00	–	–	–	–
55 Rim Latch Bolt Axle	050353	12.00	–	–	–	–
55 Rim Latch Bolt Spring	050354	12.00	–	–	–	–
55NL CAM RH	050355	36.00	–	–	–	–
55NL CAM LH	050356	36.00	–	–	–	–
55 Axle Retainer Pkg/2	090023	28.00	–	–	–	–
55 Spring Anchor Screw Pkg/10	090024	10.00	–	–	–	–
55 Backplate Screw Pkg/10	090025	10.00	–	–	–	–
55 Rim Center Case Retaining Screw Pkg/2	090022	45.00	–	–	–	–
55 Rim Center Case Retaining Screw Pkg/10	090050	202.00	–	–	–	–
55 Rim Center Case Mounting Pkg	900507	–	12.00	12.00	12.00	12.00
55 Rim 2" Dr SNB Mounting Pkg	900512	–	12.00	12.00	12.00	12.00
Center Case Parts - 5547						
5547 Control Lever	050357	50.00	–	–	–	–
55 Retaining Screw Pkg/10	090051	202.00	–	–	–	–
55 Retaining Screw Pkg/2	090026	45.00	–	–	–	–
55 Case Bushing	050333	15.00	–	–	–	–
5547 Center Case Mounting Pkg	900508	–	12.00	12.00	12.00	12.00
5547 2" Dr SNB Mounting Pkg	900514	–	12.00	12.00	12.00	12.00
5547 Blind Fastener Package	900539	46.00	–	–	–	–

Prices subject to change without notice.

Description	Part. No.	Non–Finished	US10B, US26D	US10	US4	US3, US26, SPBLK
			List Price			
Center Case Kits – 5547–F/5547WDC/5575/5575–F						
5547-F/47WDC/75/75F Lift Member	050360	108.00	–	–	–	–
5547-F/47WDC Lift Member Channel	050359	40.00	–	–	–	–
5547/47–F Latch Release Spring	050362	12.00	–	–	–	–
5547-F/47WDC Spring Anchor	050363	15.00	–	–	–	–
5547-F/47WDC Lift Member Lever	050358	53.00	–	–	–	–
55 Case Bushing	050333	15.00	–	–	–	–
55 Retaining Screw Pkg/10	090051	202.00	–	–	–	–
55 Retaining Screw Pkg/2	090026	45.00	–	–	–	–
55 Spring Anchor Screw Pkg/10	090024	10.00	–	–	–	–
Lift Member Guide Screw Pkg/10	090027	10.00	–	–	–	–
5547-F/5575/75-F Center Case Mounting Pkg	900509	–	12.00	12.00	12.00	12.00
5547WDC Center Case Mounting Pkg	900507	–	12.00	12.00	12.00	12.00
5547WDC 2" Dr SNB Mounting Pkg	900512	–	12.00	12.00	12.00	12.00
5547/75 2" Dr SNB Mounting Pkg	900514	–	12.00	12.00	12.00	12.00
Crossbars						
42" Standard Crossbar Kit	050004	–	226.00	231.00	226.00	238.00
42" Knurled Crossbar Kit	050005	–	364.00	370.00	364.00	392.00
37" Crossbar Reinforcement Kit	050459	122.00	–	–	–	–
End Case						
55R/5575/5547 RHR End Case Kit	050196	–	361.00	392.00	361.00	511.00
55R/5575/5547 LHR End Case Kit	050197	–	361.00	392.00	361.00	511.00
5547/75-F RHR End Case Kit	050198	–	361.00	392.00	361.00	511.00
5547/75-F LHR End Case Kit	050199	–	361.00	392.00	361.00	511.00
RX5547/75/-F LHR End Case Kit	040000	–	680.00	713.00	680.00	834.00
RX5547/75/-F RHR End Case Kit	040001	–	680.00	713.00	680.00	834.00
55 Series End Case Backplate	050364	15.00	–	–	–	–
55 Retaining Screw Pkg/10	090051	202.00	–	–	–	–
55 Retaining Screw Pkg/2	090026	45.00	–	–	–	–
55 End Case Spring Pkg/20	090052	79.00	–	–	–	–
55 End Case Spring Pkg/4	090028	38.00	–	–	–	–
55 End Case Spring Lever	050366	45.00	–	–	–	–
55 Series End Case Mounting Pkg	900507	–	12.00	12.00	12.00	12.00
Lever Arms						
55 R/M/CV LH Lever Arm Kit	050112	–	386.00	412.00	336.00	442.00
55 R/M/CV RH Lever Arm Kit	050136	–	386.00	412.00	336.00	442.00
5547–F/75–F LH Lever Arm Kit	050137	–	386.00	412.00	336.00	442.00
5547–F/75–F RH Lever Arm Kit	050139	–	386.00	412.00	336.00	442.00
55 Wedgetite Screw Pkg/2	090008	10.00	–	–	–	–
55 Wedgetite Screw Pkg/30	090081	53.00	–	–	–	–
Crossbar Tube Attaching Wedge Pkg/2	090020	12.00	–	–	–	–
Crossbar Tube Attaching Ring Pkg/2	090021	15.00	–	–	–	–
55 Dog Screw Pkg/2	090029	23.00	–	–	–	–
55 Dog Screw Pkg/10	090053	72.00	–	–	–	–
227 Dog Key 5/32" Pkg/2	090005	20.00	–	–	–	–
227 Dog Key 5/32" Hex Pkg/10	090085	71.00	–	–	–	–
55 Series Special Hex Key (Reversing Pkg)	103866	12.00	–	–	–	–

Prices subject to change without notice.

Description	Part. No.	List Price Non-Finished	US10B, US26D	US10	US4	US3, US26, SPBLK
Vertical Latches						
5547-F Soffit Latch Kit	114141	204.00	–	–	–	–
5547-F Release Guide Cover w/Screws	050278	–	202.00	202.00	202.00	274.00
5547/47WDC Bottom Bracket Guide	050370	84.00	–	–	–	–
5547 Rod Connector Rivet Pkg/10	090011	10.00	–	–	–	–
5547WDC Top Plate Screw Pkg Pkg/10	090033	13.00	–	–	–	–
5547-F Plunger Release Brkt Screws Pkg/10	090034	–	21.00	36.00	21.00	21.00
5547-F Flush Tran. Release Screws Pkg/10	090035	–	15.00	15.00	15.00	15.00
5547/47WDC Top Plate	100316	123.00	–	–	–	–
5547 Soffit Latch Mounting Pkg	900502	10.00	–	–	–	–
5547-F Plunger Release Bracket	900576	–	83.00	83.00	83.00	83.00
5547-F Flush Transom Release Brkt w/Screws	900614	–	121.00	121.00	121.00	121.00
5547-F Top Latch Release Screws Pkg/20	PKGSRV.1018	12.00	–	–	–	–
Vertical Rods						
5547 Top Rod Kit 6'8"-8' Door	050053	393.00	–	–	–	–
5547-F Top Rod Kit 6'8"-8' Door	050457	–	393.00	393.00	393.00	393.00
5547WDC Top Rod Kit 6'8"-8' Door	050110	393.00	–	–	–	–
ES5547 Top Latch/Rod Serv Kit	050656	444.00	–	–	–	–
5547 Top Rod Kit 8'-10' Door	050372	418.00	–	–	–	–
5547-F Top Rod Kit 8'-10' Door	050373	–	418.00	418.00	418.00	418.00
5547WDC Top Rod Kit 8'-10' Door	050374	418.00	–	–	–	–
5547 Bottom Rod Kit	050036	393.00	–	–	–	–
5547-F Bottom Rod Kit	050458	393.00	–	–	–	–
5547WDC Bottom Rod Kit	050096	393.00	–	–	–	–
5547 Extension Rod Kit 8'-10' Door	051704	29.00	–	–	–	–
5547-F Extension Rod Kit 8'-10' Door	051705	29.00	–	–	–	–
5547WDC Extension Rod Kit 8'-10' Door	051707	29.00	–	–	–	–
5547 Extension Rod Kit 10'-12' Door	050631	95.00	–	–	–	–
5547-F Extension Rod Kit 10'-12' Door	050634	201.00	–	–	–	–
5547WDC Extension Rod Kit 10'-12' Door	050639	201.00	–	–	–	–
5547 Extension Rod Kit 12'-14' Door	050632	95.00	–	–	–	–
5547-F Extension Rod Kit 12'-14' Door	050635	201.00	–	–	–	–
5547WDC Extension Rod Kit 12'-14' Door	050640	209.00	–	–	–	–
5547 Extension Rod Kit 14'-16' Door	050633	95.00	–	–	–	–
5547-F Extension Rod Kit 14'-16' Door	050636	201.00	–	–	–	–
5547WDC Extension Rod Kit 14'-16' Door	050641	201.00	–	–	–	–
5547 Rod Control Housing	050367	357.00	–	–	–	–
5547 Top Rod Connector w/Pin	050368	48.00	–	–	–	–
5547 Bottom Rod Connector w/Pin	050369	45.00	–	–	–	–
5547-F Rod Guide Mounting Screws Pkg/10	090018	10.00	–	–	–	–
5547 Rod Connector Pin Pkg/2	090030	13.00	–	–	–	–
5547 Top Rod 1/8 x 5/8 Roll Pin Pkg/10	090032	10.00	–	–	–	–
5547WDC Latch Control	100315	381.00	–	–	–	–
5547-F Bottom Guide Package	100741	84.00	–	–	–	–
5547-F Rod Guide Package	105144	15.00	–	–	–	–
5547-F Rod Set Mounting Package	900541	10.00	–	–	–	–

Prices subject to change without notice.

Description	Part. No.	Non-Finished	List Price US10B, US26D	US10	US4	US3, US26, SPBLK
Backplate Conversion Kits						
88CK-NL Converts TP,K to NL - Panic	050101	–	56.00	58.00	52.00	60.00
88CK-TP Converts EO,DT,NL,K to TP - Panic	050102	–	69.00	73.00	65.00	79.00
88CK-K/L Converts EO,DT,NL,TP to K or L - Panic	050103	–	119.00	124.00	115.00	133.00
88CK-NL-F Converts TP,K to NL - Fire	050106	–	63.00	64.00	61.00	65.00
88CK-TP-F Converts EO,DT,NL,K to TP - Fire	050107	–	79.00	83.00	69.00	90.00
88CK-K/L-F Converts EO,DT,NL,TP to K or L - Fire	050108	–	119.00	124.00	117.00	133.00
8827CK-TP Converts EO,DT,K to TP - Panic or Fire	050104	214.00	–	–	–	–
8827CK-K/L-K/L-F Converts EO,DT,TP to K or L - Panic or Fire	050200	213.00	–	–	–	–
8827CK-K-NL/K-NL-F	050201	238.00	–	–	–	–
8827CK-TP-NL/TP-NL-F	050202	216.00	–	–	–	–
8827CK-EO/DT/TL	050447	36.00	–	–	–	–
Center Case Kits (includes mounting screws)						
88EO/DT/NL Rim Center Case Kit	050409	–	696.00	729.00	585.00	761.00
88TP Rim Center Case Kit	050410	–	696.00	729.00	585.00	761.00
88K/L RHR Center Case Kit	050411	–	696.00	729.00	585.00	761.00
88K/L LHR Center Case Kit	050412	–	696.00	729.00	585.00	761.00
8875 RHR Center Case Kit	050413	–	559.00	574.00	466.00	611.00
8875 LHR Center Case Kit	050414	–	559.00	574.00	466.00	611.00
8827EO/DT/TL Center Case Kit	050415	–	369.00	377.00	344.00	404.00
8827TP Center Case Kit	050416	–	490.00	501.00	427.00	511.00
8827K/L Center Case Kit	050417	–	615.00	644.00	525.00	668.00
8827TP-NL Center Case Kit	050418	–	490.00	501.00	427.00	511.00
8827K-NL Center Case Kit	050419	–	615.00	644.00	525.00	668.00
8875-F RHR Center Case Kit	050420	–	644.00	676.00	528.00	699.00
8875-F LHR Center Case Kit	050421	–	644.00	676.00	528.00	699.00
8847-F RHR Center Case Kit	050422	–	644.00	676.00	528.00	699.00
8847-F LHR Center Case Kit	050423	–	644.00	676.00	528.00	699.00
88EO-F/NL-F RHR Center Case Kit	050424	–	876.00	1,036.00	1,036.00	1,095.00
88EO-F/NL-F LHR Center Case Kit	050425	–	876.00	1,036.00	1,036.00	1,095.00
Center Case Kits (includes mounting screws)						
88TP-F RHR Center Case Kit	050426	–	908.00	1,076.00	1,076.00	1,137.00
88TP-F LHR Center Case Kit	050427	–	908.00	1,076.00	1,076.00	1,137.00
88K/L-F RHR Center Case Kit	050428	–	908.00	1,076.00	1,076.00	1,137.00
88K/L-F LHR Center Case Kit	050429	–	908.00	1,076.00	1,076.00	1,137.00
8827EO-F/TL-F Center Case Kit	050430	–	476.00	492.00	393.00	516.00
8827TP-F Center Case Kit	050431	–	690.00	722.00	575.00	755.00
8827K/L-F Center Case Kit	050432	–	724.00	758.00	611.00	791.00
8827TP-NL-F Center Case Kit	050433	–	668.00	701.00	549.00	728.00
8827K-NL-F Center Case Kit	050434	–	739.00	758.00	618.00	806.00

Prices subject to change without notice.

Description	Part. No.	Non-Finished	List Price US10B, US26D	US10	US4	US3, US26, SPBLK
Center Case Parts - Rim						
* 88 Thumbpiece Lift Replacement Kit	050019	79.00	–	–	–	–
88 Rim Auxiliary Backplate	050260	–	50.00	53.00	50.00	53.00
88-F Master Cam RH	050273	69.00	–	–	–	–
88-F Master Cam LH	050274	69.00	–	–	–	–
88-F Auxiliary Bolt RH	050275	56.00	–	–	–	–
88-F Auxiliary Bolt LH	050276	56.00	–	–	–	–
88 Cylinder Anchor Plate	050331	11.00	–	–	–	–
88 Latchbolt w/Axle Kit	050497	81.00	–	–	–	–
88-F Latchbolt w/Axle Kit	050498	84.00	–	–	–	–
88 Rim Latch Retainer Plate	050499	12.00	–	–	–	–
88 Rim Latch Tail, Spring, Rivet Kit	050500	53.00	–	–	–	–
88 Rim Latch Tail Spring Pkg/10	050393	11.00	–	–	–	–
88 Rim Master Cam	050501	29.00	–	–	–	–
88NL Cylinder Cam	050502	32.00	–	–	–	–
88NL-F Cylinder Cam	050503	29.00	–	–	–	–
88K/L-F Knob Cam Lift	050504	48.00	–	–	–	–
88K/L-F Cylinder Cam	050505	29.00	–	–	–	–
88K/L-F Knob Cam Bracket	050506	97.00	–	–	–	–
88TP/-F Cylinder Cam	050508	15.00	–	–	–	–
88 Rim Latch Bolt Axle Pkg/4	090001	12.00	–	–	–	–
88 Rim Center Case Rivet Pkg/10	090002	12.00	–	–	–	–
88-F Rim Gravity Dog Spring Pkg/5	090009	12.00	–	–	–	–
88K/L-F Retaining Ring Pkg/10	090015	12.00	–	–	–	–
88-F Auxiliary Bolt Return Spring Pkg/5	090017	12.00	–	–	–	–
Hex Socket Wrench 5/32"	113853	9.00	–	–	–	–
88 C/C or E/C Mtg Pkg (CS and MS)	900503	–	13.00	13.00	13.00	13.00
88 C/C or E/C Mtg Pkg (CS Screws)	900504	–	12.00	12.00	12.00	12.00
88 C/C or E/C Mtg Pkg (MS Scr 1-3/4" Dr)	900505	–	11.00	11.00	11.00	11.00
88 C/C or E/C Mtg Pkg (MS Scr 2-1/4" Dr)	900506	–	11.00	11.00	11.00	11.00
88 Rim Latch Retainer Plate Screw Pkg/10	900610	12.00	–	–	–	–
88 Backplate Screw Pkg/4	900613	12.00	–	–	–	–

* For 88TP/TP-F devices shipped after June 2000. For devices shipped before June 2000, replace 050102 for 88TP or 050107 for 88TP-F.

Prices subject to change without notice.

Description	Part. No.	List Price Non-Finished	US10B, US26D	US10	US4	US3, US26, SPBLK
Center Case Parts - Surface Vertical						
88 Cylinder Anchor Plate	050331	11.00	–	–	–	–
8827/27-F Rod Control	050446	97.00	–	–	–	–
8827K/K-NL/TP/TP-NL/-F Cylinder Cam	050448	29.00	–	–	–	–
8827K/K-NL/-F Knob Hub	050449	108.00	–	–	–	–
8827K-NL/TP-NL Backplate Pin Pkg/2	090012	23.00	–	–	–	–
8827/27-F Rod Control Pin Pkg/2	090016	12.00	–	–	–	–
88 C/C or E/C Mtg Pkg (CS and MS)	900503	–	13.00	13.00	13.00	13.00
88 C/C or E/C Mtg Pkg (CS Screws)	900504	–	12.00	12.00	12.00	12.00
88 C/C or E/C Mtg Pkg (MS Scr 1-3/4" Dr)	900505	–	11.00	11.00	11.00	11.00
88 C/C or E/C Mtg Pkg (MS Scr 2-1/4" Dr)	900506	–	11.00	11.00	11.00	11.00
8827 Backplate Screw Pkg	900615	12.00	–	–	–	–
Center Case Parts - Concealed Vertical/Mortise						
8847-F/75/75-F Latch Control LH	050209	193.00	–	–	–	–
8847-F/75/75-F Latch Control RH	050210	193.00	–	–	–	–
8847-F/75/75-F Backplate w/Screws	050211	15.00	–	–	–	–
88 Cylinder Anchor Plate	050331	11.00	–	–	–	–
8847/75-F Flat Point Set Screw Pkg/5	090013	14.00	–	–	–	–
8847-F/75/75-F C/Case Spring Pkg/2	090014	12.00	–	–	–	–
88 C/C or E/C Mtg Pkg (CS and MS)	900503	–	13.00	13.00	13.00	13.00
88 C/C or E/C Mtg Pkg (CS Screws)	900504	–	12.00	12.00	12.00	12.00
88 C/C or E/C Mtg Pkg (MS Scr 1-3/4" Dr)	900505	–	11.00	11.00	11.00	11.00
88 C/C or E/C Mtg Pkg (MS Scr 2-1/4" Dr)	900506	–	11.00	11.00	11.00	11.00
8827 Backplate Screw Pkg	900615	12.00	–	–	–	–
Crossbars						
42" Standard Crossbar Kit	050004	–	226.00	231.00	226.00	238.00
42" Knurled Crossbar Kit	050005	–	362.00	369.00	362.00	391.00
37" Crossbar Reinforcement Kit	050459	122.00	–	–	–	–

Prices subject to change without notice.

Description	Part. No.	Non-Finished	List Price US10B, US26D	US10	US4	US3, US26, SPBLK
End Case						
88 R/M/V End Case Kit	050435	–	238.00	258.00	202.00	274.00
8827-F/8875-F/8847-F End Case Kit	050436	–	322.00	335.00	272.00	358.00
88-F Rim End Case Kit	050437	–	282.00	304.00	238.00	330.00
88 RX Subminiature Switch	968938	33.00	–	–	–	–
88 End Case Spring Pkg/10	090080	53.00	–	–	–	–
88 End Case Spring Pkg/2	090003	13.00	–	–	–	–
88 End Case Spring Stop Kit	050451	15.00	–	–	–	–
88-F End Case Spring Stop Kit	050452	15.00	–	–	–	–
88/88-F End Case Spring Tube	050476	12.00	–	–	–	–
88/88-F Spring Tube Bracket w/Screws Kit	050477	12.00	–	–	–	–
88 C/C or E/C Mtg Pkg (CS and MS)	900503	–	13.00	13.00	13.00	13.00
88 C/C or E/C Mtg Pkg (CS Screws)	900504	–	12.00	12.00	12.00	12.00
88 C/C or E/C Mtg Pkg (MS Scr 1-3/4" Dr)	900505	–	11.00	11.00	11.00	11.00
88 C/C or E/C Mtg Pkg (MS Scr 2-1/4" Dr)	900506	–	11.00	11.00	11.00	11.00
Lever Arms						
88 R/M/V RH Lever Arm Kit	050438	–	188.00	198.00	159.00	202.00
88 R/M/V LH Lever Arm Kit	050439	–	188.00	198.00	159.00	202.00
88-F Rim RH Lever Arm Kit	050440	–	256.00	263.00	226.00	272.00
88-F Rim LH Lever Arm Kit	050441	–	256.00	263.00	226.00	272.00
8827-F/47-F RH Lever Arm Kit	050442	–	256.00	263.00	226.00	272.00
8827-F/47-F LH Lever Arm Kit	050443	–	256.00	263.00	226.00	272.00
8875-F RH Lever Arm Kit	050444	–	256.00	263.00	226.00	272.00
8875-F LH Lever Arm Kit	050445	–	256.00	263.00	226.00	272.00
Axle Security Pin Pkg/50	033022	55.00	–	–	–	–
Axle Security Pin Pkg/10	090007	15.00	–	–	–	–
Dog Screw Pkg/2	090004	21.00	–	–	–	–
Dog Screw Pkg/10	090083	73.00	–	–	–	–
227 Dog Key 5/32" Pkg/2	090005	20.00	–	–	–	–
227 Dog Key 5/32" Pkg/10	090085	71.00	–	–	–	–
Lever Arm Axles Pkg/2	090006	32.00	–	–	–	–
Lever Arm Axles Pkg/10	090082	145.00	–	–	–	–
Wedgetite Screw Pkg/2	090008	10.00	–	–	–	–
Wedgetite Screws Pkg/30	090081	53.00	–	–	–	–
Crossbar Tube Attaching Wedge Pkg/2	090020	12.00	–	–	–	–
Crossbar Tube Attaching Ring Pkg/2	090021	15.00	–	–	–	–
88 Lever Arm Axle Package	103865	69.00	–	–	–	–

Prices subject to change without notice.

Description	Part. No.	List Price Non-Finished	US10B, US26D	US10	US4	US3, US26, SPBLK
Vertical Latches						
8827 LR Top Latch Kit Less Cover	050460	205.00	–	–	–	–
8827 LR Bottom Latch Kit Less Cover	050461	205.00	–	–	–	–
8827-F Top Latch Kit Less Cover	050462	235.00	–	–	–	–
8827-F Bottom Latch Kit Less Cover	050463	235.00	–	–	–	–
8827 PL Top Latch Kit Less Cover	050471	136.00	–	–	–	–
8827 PL Bottom Latch Kit Less Cover	050472	136.00	–	–	–	–
8827-F/47-F Soffit Latch Kit	114141	204.00	–	–	–	–
8827 LR Top Latch Kit w/Cover	050466	–	303.00	313.00	303.00	323.00
8827 LR Bottom Latch Kit w/Cover	050467	–	303.00	313.00	303.00	323.00
8827-F Top Latch Kit w/Cover	050468	–	371.00	385.00	366.00	418.00
8827-F Bottom Latch Kit w/Cover	050469	–	371.00	385.00	366.00	418.00
8827 PL Top Latch Kit w/Cover	050473	–	235.00	242.00	227.00	280.00
8827 PL Bottom Latch Kit w/Cover	050479	–	235.00	242.00	227.00	280.00
8827-F Flush Transom Latch Kit w/Cover	050480	–	385.00	415.00	385.00	430.00
8827 Latch Cover Kit	050464	–	84.00	92.00	84.00	108.00
8827-F Top Latch Cover Kit	050465	–	131.00	136.00	123.00	174.00
8827-F Flush Transom Latch Cover Kit	050481	–	182.00	190.00	182.00	204.00
8827 Latch Special Chassis Nut	050277	12.00	–	–	–	–
8847-F Release Guide Cover w/Screws	050278	–	202.00	202.00	202.00	274.00
8827 LR Top Rod Connector	050279	15.00	–	–	–	–
8827 LR Bottom Rod Connector	050327	15.00	–	–	–	–
8827 Chassis Tie Rod	050328	12.00	–	–	–	–
8827-F Special Chassis Hex Stud	050478	12.00	–	–	–	–
8827-F Plunger Release Bracket	107765	–	72.00	72.00	63.00	72.00
8827 Latch Case Mounting Package	900501	10.00	–	–	–	–
8827/47-F Soffit Latch Mounting Package	900502	10.00	–	–	–	–
8847-F Plunger Release Bracket Package	900576	–	83.00	83.00	83.00	83.00
8847-F Flush Transom Release Brkt Pkg	900614	–	121.00	121.00	121.00	121.00
8827 Latch Case Cover Screw Package	900850	–	12.00	12.00	12.00	12.00
8827-F Flush Transom Latch Screw Pkg	900852	–	32.00	32.00	32.00	32.00

Prices subject to change without notice.

Description	Part. No.	Non-Finished	List Price US26D	US10B	US10	US4	US3, US26, SPBLK
Vertical Rods							
8827 Top Rod Kit	050453	–	108.00	108.00	125.00	108.00	138.00
8827-F Top Rod Kit	050454	–	108.00	108.00	125.00	108.00	138.00
8827 Bottom Rod Kit	050455	–	108.00	108.00	125.00	108.00	138.00
8827-F Bottom Rod Kit	050456	–	108.00	108.00	125.00	108.00	138.00
8847-F Top Rod Kit - 6'8"-8' Door	050457	–	393.00	393.00	393.00	393.00	393.00
8847-F Bottom Rod Kit	050458	393.00	–	–	–	–	–
8827 One Piece Top Rod - 8'	050662	–	134.00	191.00	207.00	167.00	415.00
8827-F One Piece Top Rod - 8'	050663	–	134.00	191.00	207.00	167.00	415.00
8827 12" Extension Rod Kit	051701	–	29.00	29.00	29.00	29.00	29.00
8827 24" Extension Rod Kit	051703	–	29.00	29.00	29.00	29.00	29.00
8827 36" Extension Rod Kit	050660	–	89.00	136.00	100.00	85.00	305.00
8827 48" Extension Rod Kit	050661	–	104.00	151.00	121.00	100.00	320.00
8847-F Extension Rod Kit - 8'-10' Door	051705	29.00	–	–	–	–	–
8847-F Extension Rod Kit - 10'-12' Door	050634	201.00	–	–	–	–	–
8847-F Extension Rod Kit - 12'-14' Door	050635	201.00	–	–	–	–	–
8847-F Extension Rod Kit - 14'-16' Door	050636	201.00	–	–	–	–	–
8827 Extension Rod Coupling	050093	15.00	–	–	–	–	–
8827 Rod Guide Kit	050482	–	79.00	79.00	81.00	77.00	81.00
8827/27-F Bottom Rod Roll Pin Pkg/10	090010	13.00	–	–	–	–	–
8847/47-F Rod Connector Rivet Pkg/10	090011	10.00	–	–	–	–	–
8847-F Rod Guide Mtg. Screws Pkg/10	090018	10.00	–	–	–	–	–
8847-F Bottom Guide Package	100741	84.00	–	–	–	–	–
8847-F Rod Guide Kit	105140	23.00	–	–	–	–	–
8827 Rod Guide Mounting Package	900534	–	12.00	12.00	20.00	12.00	20.00
8847-F Rod Set Mounting Package	900541	10.00	–	–	–	–	–
8827 PL Top Rod Connector	967341	13.00	–	–	–	–	–

Prices subject to change without notice.

Description	Part. No.	Non-Finished	US28, 313, 315	US26D	✓US32D	US10	US4	US3, ✓US15, US26. 643E
			List Price					
Center Case								
98/99 Rim Center Case Kit Less Cover	050020	451.00	–	–	–	–	–	–
98/99-F Rim Center Case Kit Less Cover	050026	473.00	–	–	–	–	–	–
98/9927/-F Center Case Kit Less Cover	050021	244.00	–	–	–	–	–	–
98/9947/48/-F Center Case Kit Less Cover	050022	625.00	–	–	–	–	–	–
98/9975/-F Center Case Kit Less Cover	050023	175.00	–	–	–	–	–	–
98/99-2 RHR Center Case Kit Less Cover	050024	776.00	–	–	–	–	–	–
98/99-2 LHR Center Case Kit Less Cover	050025	776.00	–	–	–	–	–	–
98/99-F-2 RHR Center Case Kit Less Cover	050027	786.00	–	–	–	–	–	–
98/99-F-2 LHR Center Case Kit Less Cover	050028	786.00	–	–	–	–	–	–
98/9975-2 RHR Center Case Kit Less Cover	050029	302.00	–	–	–	–	–	–
98/9975-2 LHR Center Case Kit Less Cover	050030	302.00	–	–	–	–	–	–
SD98/99/57 RHR Rim Center Case Kit Less Cover	050548	755.00	–	–	–	–	–	–
SD98/99/57 LHR Rim Center Case Kit Less Cover	050549	755.00	–	–	–	–	–	–
SD98/9927 RHR Center Case Kit Less Cover	050550	555.00	–	–	–	–	–	–
SD98/9927 LHR Center Case Kit Less Cover	050551	555.00	–	–	–	–	–	–
SD98/9947/48/49 RHR Center Case Kit Less Cover	050552	776.00	–	–	–	–	–	–
SD98/9947/48/49 LHR Center Case Kit Less Cover	050553	776.00	–	–	–	–	–	–
WS98/9927 Center Case RHR Less Cover	101024	451.00	-	-	-	-	-	-
WS98/9927 Center Case LHR Less Cover	101023	451.00	-	-	-	-	-	-
WS98/9957 Center Case RHR Less Cover	24086894	451.00	-	-	-	-	-	-
WS98/9957 Center Case LHR Less Cover	24086860	451.00	-	-	-	-	-	-
SD98/99 Rim Conversion Kit RHR	050386	–	1,090.00	1,147.00	1,192.00	1,192.00	1,147.00	1,203.00
SD98/99 Rim Conversion Kit LHR	050387	–	1,090.00	1,147.00	1,192.00	1,192.00	1,147.00	1,203.00
98/99-2 Conversion Kit RHR	050388	–	1,090.00	1,147.00	1,192.00	1,192.00	1,147.00	1,203.00
98/99-2 Conversion Kit LHR	050389	–	1,090.00	1,147.00	1,192.00	1,192.00	1,147.00	1,203.00
98/99-F-2 Conversion Kit RHR	050886	–	1,276.00	1,334.00	1,378.00	1,378.00	1,334.00	1,389.00
98/99-F-2 Conversion Kit LHR	050885	–	1,276.00	1,334.00	1,378.00	1,378.00	1,334.00	1,389.00
98/99-2SI Conversion Kit RHR	051883	–	1,339.00	1,398.00	1,440.00	1,440.00	1,398.00	1,453.00
98/99-2SI Conversion Kit LHR	051884	–	1,339.00	1,398.00	1,440.00	1,440.00	1,398.00	1,453.00
98/99-F-2SI Conversion Kit RHR	050884	–	1,525.00	1,584.00	1,626.00	1,626.00	1,584.00	1,640.00
98/99-F-2SI Conversion Kit LHR	050883	–	1,525.00	1,584.00	1,626.00	1,626.00	1,584.00	1,640.00
98/99-2SI Center Case Cover Kit RHR	050831	–	190.00	220.00	248.00	220.00	220.00	263.00
98/99-2SI Center Case Cover Kit LHR	050832	–	190.00	220.00	248.00	220.00	220.00	263.00
98/99/-F Center Case Cover Kit	050071	–	142.00	205.00	214.00	205.00	205.00	235.00
98/9927/27-F Center Case Cover Kit	050072	–	142.00	205.00	214.00	205.00	205.00	235.00
98/9947/47/49/75/75-F Center Case Cover Kit	050073	–	142.00	205.00	214.00	205.00	205.00	235.00
98/9957/-F Center Case Cover Kit	050554	–	142.00	205.00	214.00	205.00	205.00	235.00
98/99-2/SD RHR Center Case Cover Kit	050555	–	184.00	214.00	240.00	214.00	214.00	256.00
98/99-2/SD LHR Center Case Cover Kit	050556	–	184.00	214.00	240.00	214.00	214.00	256.00
98/9975-2 RHR Center Case Cover Kit	050557	–	184.00	214.00	240.00	214.00	214.00	256.00
98/9975-2 LHR Center Case Cover Kit	050558	–	184.00	214.00	240.00	214.00	214.00	256.00
CX-CD/SD98/9927 RHR Center Case Cover Kit	050559	–	184.00	214.00	240.00	214.00	214.00	256.00
CX-CD/SD98/9927 LHR Center Case Cover Kit	050560	–	184.00	214.00	240.00	214.00	214.00	256.00
CX-CD/SD98/9947 RHR Center Case Cover Kit	050562	–	184.00	214.00	240.00	214.00	214.00	256.00
CX-CD/SD98/9947 LHR Center Case Cover Kit	050563	–	184.00	214.00	240.00	214.00	214.00	256.00

For Antimicrobial Finishes add $7.00 to list. ✓ US32D AND US15 finishes available with Series 98 only.

Prices subject to change without notice.

Description	Part. No.	Non-Finished	US28, 313, 315	US26D	✓US32D	US10	US4	US3, ✓US15, US26, 643E
				List Price				
Center Case (continued)								
Control Link Pin Kit (w/Retaining Ring)	050529	12.00	–	–	–	–	–	–
Control Link Pin Retaining Ring Pkg/10	090107	12.00	–	–	–	–	–	–
Control Link Pin Pkg/10	090031	15.00	–	–	–	–	–	–
NL Drive Screw Pkg/10	090074	20.00	–	–	–	–	–	–
Latchbolt Pin Pkg/10	090079	12.00	–	–	–	–	–	–
Center Case Cover Bracket	050564	15.00	–	–	–	–	–	–
Center Case Reinforcing Bracket	050565	15.00	–	–	–	–	–	–
CD-CX/SD Cylinder Dog Housing	112409	–	145.00	145.00	–	145.00		145.00
CX-CD/SD Cylinder Dog Bracket Kit LHR	112456	79.00	–	–	–	–	–	–
CX-CD/SD Cylinder Dog Bracket Kit RHR	112455	79.00	–	–	–	–	–	–
98/99-2 Rim Cylinder Adaptor	114984	–	136.00	136.00	136.00	136.00	136.00	136.00
98/9975-2 LHR Cylinder Adaptor	113100	–	215.00	215.00	215.00	215.00	215.00	215.00
98/9975-2 RHR Cylinder Adaptor	113101	–	215.00	215.00	215.00	215.00	215.00	215.00
Center Case Cover Screws	900892	–	12.00	–	12.00	12.00	12.00	–
Center Case Cover Bearing Insert-Bracket	969889	12.00	–	–	–	–	–	–
Cover Plate / Conversion Kits								
99 Hex Dog Conversion Kit fits 3' to 4'	050114	–	73.00	–	–	73.00	73.00	73.00
98 Hex Dog Conversion Kit fits 3' to 4'	050117	–	73.00	–	73.00	73.00	73.00	73.00
99 CD Conversion Kit fits 3' to 4'	050115	–	97.00	–	–	97.00	97.00	97.00
98 CD Conversion Kit fits 3' to 4'	050132	–	97.00	–	97.00	97.00	97.00	97.00
98 CDSI Kit 3' / 4'	040078/040079	–	319.00	319.00	319.00	319.00	319.00	319.00
98 HDSI Kit 3' / 4'	040080/040081	–	230.00	230.00	230.00	230.00	230.00	230.00
99 CDSI Kit 3' / 4'	040082/040083	–	319.00	319.00	-	319.00	319.00	319.00
99 HDSI Kit 3' / 4'	040084/040085	–	230.00	230.00	-	230.00	230.00	230.00
CDSI/HDSI Configuration Pkg	900416-00	16.00	–	–	–	–	–	–
99 Fire or Less Dogging Cover Plate Kit fits 3' to 4'	050589	–	45.00	–	–	45.00	45.00	45.00
98 Fire or Less Dogging Cover Plate Kit fits 3' to 4'	050588	–	45.00	–	45.00	45.00	45.00	45.00
99 ALK Cover Plate Kit fits 3' to 4'	050569	–	107.00	–	–	107.00	107.00	107.00
98 ALK Cover Plate Kit fits 3' to 4'	050570	–	107.00	–	–	107.00	107.00	107.00
CX99 Cover Plate Kit fits 3' to 4' - Ordered before 8/17/2015	050572	–	107.00	–	–	107.00	107.00	107.00
CX98 Cover Plate Kit fits 3' to 4' - Ordered before 8/17/2015	050573	–	107.00	–	107.00	107.00	107.00	107.00
CX99 Cover Plate Kit fits 3' to 4' - Ordered after 8/17/2015	040093	–	107.00	–	–	107.00	107.00	107.00
CX98 Cover Plate Kit fits 3' to 4' - Ordered after 8/17/2015	040094	–	107.00	–	107.00	107.00	107.00	107.00
99 CI Kit 3'	050770	–	272.00	–	–	272.00	272.00	272.00
98 CI Kit 3'	050771	–	272.00	–	272.00	272.00	272.00	272.00
99 CI Kit 4'	050772	–	272.00	–	–	272.00	272.00	272.00
98 CI Kit 4'	050773	–	272.00	–	272.00	272.00	272.00	272.00
99 DI Kit 3'	050766	–	250.00	–	–	250.00	250.00	250.00
98 DI Kit 3'	050767	–	250.00	–	250.00	250.00	250.00	250.00
99 DI Kit 4'	050768	–	250.00	–	–	250.00	250.00	250.00
98 DI Kit 4'	050769	–	250.00	–	250.00	250.00	250.00	250.00
98/9947WDC Conversion Kit - Panic Only	050134	–	347.00	–	280.00	285.00	317.00	381.00

✓ US32D AND US15 finishes available with Series 98 only.
For Antimicrobial Finishes add $7.00 to list.

Prices subject to change without notice.

Description	Part. No.	Non-Finished	US28, 313	US26D	✓US32D	US10	US4	US3, ✓US15, US26, 315, 643e
				List Price				
End Cap								
98/99 Impact Resistant End Cap Kit	050014	–	81.00	89.00	100.00	100.00	90.00	90.00
98/99 Impact Resistant End Cap Scr Pkg	900597	–	–	12.00	12.00	15.00	12.00	12.00
98/99 Impact Resistant End Cap Bracket	050524	11.00	–	–	–	–	–	–
Push Bar								
* 98/99 Push Bar Retrofit Kit - 3' Dr	See Note	–	208.00	246.00	374.00	336.00	325.00	384.00
* 98/99 Push Bar Retrofit Kit - 4' Dr	See Note	–	224.00	270.00	389.00	351.00	336.00	398.00
98/99 Push Bar Guide Pkg/10	090049	13.00	–	–	–	–	–	–

* To order, specify device type, size, finish. Example: PBKIT 99 3' US28

Mechanism Case	Part. No.	Non-Finished	SP313, 315, US28,	US26D	√US32D	US10	US4	US3, √US15, US26
99 Series Mechanism Case - 3' Door	968144	–	145.00	–	–	181.00	181.00	206.00
99 Series Mechanism Case - 4' Door	968146	–	206.00	–	–	237.00	237.00	268.00
98 Series Mechanism Case - 3' Door	970191	–	145.00	–	188.00	181.00	181.00	206.00
98 Series Mechanism Case - 4' Door	970192	–	206.00	–	252.00	237.00	237.00	268.00
CD/SS Cylinder Mtg Kit	107813	–	–	60.00	–	63.00	63.00	69.00
CD/SS Cylinder Locating Washer Pkg	050490	15.00	–	–	–	–	–	–
CD/SS Mortise Cylinder Collar Pkg	050525	–	–	45.00	–	54.00	45.00	54.00
CD/SS Cylinder Lock Nut Pkg	050526	13.00	–	–	–	–	–	–
CD Actuator Pkg/2	090045	12.00	–	–	–	–	–	–
CD Dogging Plug Pkg/2	090046	11.00	–	–	–	–	–	–
227 Dog Key 5/32" Pkg/10	090085	71.00	–	–	–	–	–	–
Mechanism Case Brkt Screw Pkg/10	090073	10.00	–	–	–	–	–	–
98/99 Rim/75 98/9927-F Mtg. Pkg.1 3/4"-2 1/4" Dr	900561	12.00	–	–	–	–	–	–
98/99 Rim, 98/9927-F Mtg. Pkg. >2 1/4"-2 3/4" Dr	900424	88.00	–	–	–	–	–	–
98/99 Rim, 98/9927-F Mtg. Pkg. >2 3/4"-3 1/4" Dr	900425	88.00	–	–	–	–	–	–
98/99 Rim, 98/9927-F Mtg. Pkg. >3 1/4"-3 3/4" Dr	900426	88.00	–	–	–	–	–	–
98/99 Rim, 98/9927-F Mtg. Pkg. >3 3/4"-4 1/4" Dr	900427	88.00	–	–	–	–	–	–
98/9927/27-F Mtg. Pkg. 2 1/4" Door	900568	**12.00**	**–**	**–**	**–**	**–**	**–**	**–**

✓ US32D AND US15 finishes available with Series 98 only.
For Antimicrobial Finishes add $7.00 list

Prices subject to change without notice.

Description	Part. No.	List Price Non-Finished	List Price US28, 313 US10, US4 US3, US26, 643E
Baseplate			
Shock Absorber Pkg	050491	31.00	–
Baseplate Screw Pkg/10	090037	11.00	–
Baseplate Bumper Pkg/4	090038	11.00	–
Baseplate Return Spring Pkg/10	090039	12.00	–
Hex Dogging Shaft Pkg/2	090040	12.00	–
Dogging Spring Pkg/2	090041	11.00	–
Dogging Adaptor Spring Pkg/2	090042	15.00	–
Dogging Adaptor Pkg/2	090043	12.00	–
Dogging Hook Pkg/2	090044	12.00	–
Baseplate Bearing Strip Pkg/2	090048	12.00	–
227 Dog Key 5/32" Pkg/2	090005	20.00	–
227 Dog Key 5/32" Pkg/10	090085	71.00	–
98/9927-F LBR Latch Spring Pkg/10	090088	21.00	–
EL Dogging Rod Kit - 3'	050531	60.00	–
EL Dogging Rod Kit - 4'	050532	60.00	–
EL 6' Cable and Connector	110388	46.00	–
EL Potted Circuit Breaker	050534	305.00	–
EL Solenoid/Plunger	050535	337.00	–
HD-EL Solenoid	050536	337.00	–
HD-EL Solenoid Plunger	050537	124.00	–
EL Dogging Rod Retainer	050538	13.00	–
EL Receptacle Connector	050539	12.00	–
EL Female Terminal	050540	12.00	–
HD-EL Dog Screw	050541	15.00	–
HD-EL Solenoid Bracket	050542	27.00	–
HD-EL Dogging Spring	050543	15.00	–
SS Cable	050544	136.00	–
SS Housing	050545	454.00	–
CX99-RCM Kit Less Module - Ordered after 8/17/2015	040198	–	259.00
CX98-RCM Kit Less Module - Ordered after 8/17/2015	040199	–	259.00
CX Solenoid & Plunger	050533	302.00	–
Chexit Wiring Assembly - Ordered after 8/17/2015	040191	197.00	–
Sign 15 Second - Chexit/DE5300	113781	58.00	–
Sign 30 Second - Chexit/DE5300	113782	62.00	–

Prices subject to change without notice.

Vertical Latches

Description	Part. No.	Non-Finished	List Price US28	US26D	✓US32D	313, 315	US4, US10	US3, ✓US15, US26, 643e
* 98/9927/98/9957 Top Latch Retrofit Kit W/SNB	050091	–	145.00	145.00	145.00	145.00	145.00	145.00
* 98/9927/98/9957 Bottom Latch Retrofit Kit W/SNB	050090	–	145.00	145.00	145.00	145.00	145.00	145.00
98/9927/98/9957 Top Latch Kit Less Cover	050400	145.00	–	–	–	–	–	–
98/9927/98/9957 Bottom Latch Kit Less Cover	050401	145.00	–	–	–	–	–	–
98/9927/98/9957 Pullman Latch Kit Less Cover	050402	145.00	–	–	–	–	–	–
98/9947 Top Latch Kit	050492	282.00	–	–	–	–	–	–
98/9947 Bottom Latch Kit	050493	229.00	–	–	–	–	–	–
ES98/9947 Top Latch Kit	050128	206.00	–	–	–	–	–	–
** 98/9948 Top Latch Kit - (non EL)	050494	412.00	–	–	–	–	–	–
** EL98/9948 Top Latch Kit	050516	389.00	–	–	–	–	–	–
** 98/9948 Bottom Latch Kit	050495	443.00	–	–	–	–	–	–
98/9948 Latch Retrofit Kit - (non EL)	050047	690.00	–	–	–	–	–	–
98/9948-F Latch Retrofit Kit - (non EL)	050048	690.00	–	–	–	–	–	–
EL98/9948 Latch Retrofit Kit	050522	690.00	–	–	–	–	–	–
EL98/9948-F Latch Retrofit Kit	050523	690.00	–	–	–	–	–	–
98/9927/98/9957/27-F Latch Case Cover Kit	050566	–	54.00	69.00	–	54.00	63.00	73.00
98/9927/98/9957/27-F Latch Cover Screw Pkg.	900850	–	–	12.00	12.00	12.00	12.00	12.00
98/9927/98/9957 Top Latch Compression Spring Pkg/10	090056	12.00	–	–	–	–	–	–
98/9927/98/9957 Top Latch Spring Pkg/10	090057	12.00	–	–	–	–	–	–
98/9927/98/9957 Bolt Return Spring Pkg/10	090065	12.00	–	–	–	–	–	–
98/9927/98/9957 Top Latch Aux. Bolt Spring Pkg/10	090076	12.00	–	–	–	–	–	–
LBR Fire Latch/Strike Kit	050171	459.00	–	–	–	–	–	–
98/9927/98/9957-F AFL Strike Hole Plug	050509	11.00	–	–	–	–	–	–
98/9927/98/9957 Latch Mtg Bracket Kit	050546	29.00	–	–	–	–	–	–
98/9927/98/9957 Std 1-3/4"-2-1/4" Latch Mtg Pkg/4	900589	12.00	–	–	–	–	–	–
98/9927/98/9957 Latch Mtg. Pkg/2 for >2-1/4" - 2-3/4" Dr	900521	88.00	–	–	–	–	–	–
98/9927/98/9957 Latch Mtg. Pkg/2 for >2-3/4" - 3-1/4" Dr	900522	88.00	–	–	–	–	–	–
98/9927/98/9957 Latch Mtg. Pkg/2 for >3-1/4" - 3-3/4" Dr	900523	115.00	–	–	–	–	–	–
98/9927/98/9957 Latch Mtg. Pkg/2 for >3-3/4" - 4-1/4" Dr	900524	115.00	–	–	–	–	–	–
98/9927/98/9957-F LBR Latch Mounting Package	900980	11.00	–	–	–	–	–	–
WS98/9927 Soffit Release Bracket Package	900241	31.00	–	–	–	–	–	–
WS98/9927 Latch Mounting Package	900242	–	–	–	30.00	30.00	30.00	30.00
98/9947 Latch Mounting Bracket Kit	109324	56.00	–	–	–	–	–	–
** 98/9948 Latch Mounting Bracket Kit	112868	63.00	–	–	–	–	–	–
98/9947 Latch Brkt Mtg. Screw (Latch) Pkg/6	090059	12.00	–	–	–	–	–	–
98/9947 Latch Brkt Mtg. Screw (Door) Pkg/6	090061	12.00	–	–	–	–	–	–
98/9947/48 Latch Linkage Pin Retaining Ring Pkg/10	090063	12.00	–	–	–	–	–	–
98/9947 Latch Link Pin Pkg/10	090064	12.00	–	–	–	–	–	–
98/9947 Bolt Return Spring Pkg/10	090065	12.00	–	–	–	–	–	–
98/9947 Top Latch Compression Spring Pkg/10	090066	11.00	–	–	–	–	–	–
98/9947WDC/WDC-F Auxiliary Mtg. Package	900856	12.00	–	–	–	–	–	–
98/9947WDC Offset Link Pkg	900871	12.00	–	–	–	–	–	–
98/9927 RG/Latch Mtg. Pkg 2-1/4" - 2-3/4"	900527	–	–	104.00	–	126.00	165.00	–
98/9927 RG/Latch Mtg. Pkg 2-3/4"- 3-1/4"	900528	–	–	104.00	–	126.00	165.00	–
98/9927 RG/Latch Mtg. Pkg 3-1/4" - 3-3/4"	900529	–	–	126.00	–	148.00	181.00	–
98/9927 RG/Latch Mtg. Pkg 3-3/4" - 4-1/4"	900530	–	–	126.00	–	148.00	181.00	–

* For Devices shipped before October, 1998
**For service replacement only. Refer to Retrofit Kits 050047, 050048, 050522 and 050523 to convert 98/9947 Device to 98/9948.
✓ US32D AND US15 finishes available with Series 98 only.

Prices subject to change without notice.

Vertical Rods

Description	Part. No.	Non-Finished	List Price US28	US26D	✓US32D	313	315	US10	US4	US3, US26, 643E	✓US15
9927/9957 Top Rod Kit	050512	–	79.00	–	–	92.00	108.00	108.00	108.00	108.00	108.00
9827/9857 Top Rod Kit	050513	–	79.00	–	92.00	92.00	108.00	108.00	108.00	108.00	108.00
WS98/9927 Top Rod	101025	–	–	–	162.00	162.00	162.00	162.00	345.00	345.00	345.00
9927/9957 Bottom Rod Kit	050514	–	79.00	–	–	92.00	108.00	108.00	108.00	108.00	108.00
9827/9857 Bottom Rod Kit	050515	–	79.00	–	92.00	92.00	108.00	108.00	108.00	108.00	108.00
WS98/9927 Bottom Rod	101026	–	–	–	162.00	162.00	162.00	162.00	345.00	345.00	345.00
98/9947/48 Adj. Top Rod Kit - 6'8"-8'4" Dr	050574	92.00	–	–	–	–	–	–	–	–	–
98/9947/48 Bottom Rod Kit	050575	92.00	–	–	–	–	–	–	–	–	–
98/9947WDC Top Rod - 6'8"-8'4" Dr	050582	159.00	–	–	–	–	–	–	–	–	–
98/9947WDC Bottom Rod	050583	159.00	–	–	–	–	–	–	–	–	–
9927/9957 One Piece Top Rod Kit - 8'	050650	–	232.00	232.00	–	232.00	232.00	148.00	117.00	232.00	232.00
9927/9957 One Piece Top Rod Kit - 10'	050651	–	256.00	256.00	–	256.00	251.00	162.00	142.00	251.00	251.00
9927/9957 One Piece Top Rod Kit - 12'	050652	–	272.00	272.00	–	272.00	282.00	180.00	167.00	282.00	282.00
9827/9857 One Piece Top Rod Kit - 8'	050653	–	232.00	232.00	232.00	232.00	232.00	148.00	117.00	232.00	232.00
9827/9857 One Piece Top Rod Kit - 10'	050654	–	256.00	256.00	256.00	256.00	251.00	162.00	142.00	251.00	251.00
9827/9857 One Piece Top Rod Kit - 12'	050655	–	272.00	272.00	272.00	272.00	282.00	180.00	167.00	282.00	282.00
9927/9957 Extension Rod 36" Kit	051802	–	29.00	29.00		29.00	29.00	29.00	29.00	29.00	29.00
9827/9857 Extension Rod 36" Kit	051810	–	29.00	29.00	29.00	29.00	29.00	29.00	29.00	29.00	29.00
9927/9957 Extension Rod 60" Kit	050642	–	135.00	135.00		135.00	251.00	249.00	165.00	260.00	260.00
9827/9857 Extension Rod 60" Kit	050644	–	135.00	135.00	139.00	139.00	272.00	258.00	170.00	272.00	139.00
WS98/9927/57 Extension Rod 12" Kit	051812	-	-	-	29.00	29.00	29.00	29.00	29.00	29.00	29.00
98/9947/48 Extension Rod Kit - Adj 8'4"-10'	051808	29.00	–	–	–	–	–	–	–	–	–
98/9947/48 Extension Rod Kit - Adj 10'-11'8	050622	96.00	–	–	–	–	–	–	–	–	–
98/9947/48 Extension Rod Kit - Adj 11'8-13'4	050623	96.00	–	–	–	–	–	–	–	–	–
98/9947/48 Extension Rod Kit - Adj 13'4-15'	050624	108.00	–	–	–	–	–	–	–	–	–
98/9927/98/9957-F Rod Guide Assembly	112063	–	53.00	63.00	63.00	53.00	53.00	83.00	83.00	125.00	125.00
98/9927/98/9957-F Rod Guide Mtg. Package	900919	–	–	12.00	12.00	12.00	12.00	12.00	12.00	12.00	12.00
98/9927/98/9957 Rod Roll Pin Pkg/10	090054	13.00	–	–	–	–	–	–	–	–	–
98/9927/98/9957 Rod Connector-Latch Pkg/2	090067	20.00	–	–	–	–	–	–	–	–	–
98/9927/98/9957 Rod Connector-C/Case Pkg/2	090068	20.00	–	–	–	–	–	–	–	–	–
98/9927/98/9957 Top or Bottom Rod Connector	050547	10.00	–	–	–	–	–	–	–	–	–
* 98/9947 Rod Connecting Screw Pkg/2	090071	15.00	–	–	–	–	–	–	–	–	–
98/9948 Rod Connecting Screw Pkg/2	090072	15.00	–	–	–	–	–	–	–	–	–
98/9927/98/9957 Rod Extension Connector Pkg/4	090075	13.00	–	–	–	–	–	–	–	–	–
98/9947 Ratchet Release Kit	106222	–	136.00	–	136.00	136.00	136.00	136.00	136.00	–	–
98/9947 Ratchet Release Spacer 1/8"	970978	–	21.00	–	21.00	21.00	–	21.00	21.00	–	–
98/9947 Ratchet Lever Spring Pkg/2	090069	11.00	–	–	–	–	–	–	–	–	–
98/9947 Ratchet Release Screw Pkg/2	090070	15.00	–	–	–	–	–	–	–	–	–
98/9947 Rod Adjusting Package	900620	21.00	–	–	–	–	–	–	–	–	–
98/9947 Adjusting Screw LBR Package	900898	12.00	–	–	–	–	–	–	–	–	–
98/9947 1/2" Insulclad Kit	051841	261.00	–	–	–	–	–	–	–	–	–
98/9947 1/4" Insulclad Kit	051842	158.00	–	–	–	–	–	–	–	–	–

* For Devices shipped after July, 1997

✓ US32D AND US15 finishes available with Series 98 only.

Quiet Mechanical Retrofit Kits

QM Rim Device Kit (98/99, 33A/35A)	47259560	185.00	–	–	–	–	–	–
QM SVR Device Kit (98/9927, 3327A/3527A)	47263418	185.00	–	–	–	–	–	–
QM 996 -R/V trim Kit	47260610	215.00	–	–	–	–	–	–
Damper Assembly, 996	47259557	62.00	–	–	–	–	–	–

Prices subject to change without notice.

Description		Part No.	List Price
Vertical Latches			
49 Top Latch Assembly		24090110	255.00
49 Bottom Latch Assembly		24090128	276.00
Centerslide Kits			
98/9949 Centerslide Kit		24090144	392.00
49 Cable*			
Top Cable Assembly	Door Opening Heights 6'0" to 6'10"	47250398	222.00
Top Cable Assembly	Door Opening Heights 6'10" to 8'0"	47250175	222.00
Top Cable Assembly	Door Opening Heights >8'0" to 9'2"	47250176	222.00
Top Cable Assembly	Door Opening Heights >9'2" to 10'4"	47250177	222.00
Bottom Cable Assembly	Door Opening Heights 6'0" to 6'10"	47250403	222.00
Bottom Cable Assembly	Door Opening Heights 6'10" to 8'0"	47250178	222.00
Bottom Cable Assembly	Door Opening Heights >8'0" to 9'2"	47250179	222.00
Bottom Cable Assembly	Door Opening Heights >9'2" to 10'4"	47250180	222.00
Replacement Cable Kit (10' core wire, end fitting, and sizing templates)		47250968	92.00

For door opening heights more than 10', consult factory.
Consult customer support for non-standard center lines or if a threshold is installed.
* For Complete 49 Cable System kits, see Page 68.

Mounting Packages			
49 Bottom Mounting Package		23946437	108.00
49 Top Mounting Package		23946429	97.00
98/9949 HM/AL Centerslide Mounting		23946445	108.00
Misc.			
Cable Removal Tool - qty 1		24052979	14.00
Cable Removal Tool - Pkg/10		24090706	117.00
338 Filler Plate		24230914	88.00
Spacer Block Kit 3/4" undercut		24231516	30.00

Prices subject to change without notice.

98/9950WDC Series • Parts

Description	Part. No.	List Price
Vertical Latches		
Top Latch Kit with mounting pack	48968820	358.00
Bottom Latch Kit with mounting pack	48968838	300.00
Centerslide Kits		
9950WDC Centerslide kit with mounting pack	48973291	588.00
Fire Kits		
98/9950WDC-F Fire Kit (fire barrier, intumescent for scalp plate and barrier, mounting packs)	48968861	238.00
Mounting Kit		
Top ,Bottom, and centerslide Mounting Pkg	24685505	31.00
Top Latch Mounting Kit	49000409	12.00
Bottom Latch Mounting Kit	49000391	12.00
Cables		
TOP CABLE 6'8"-7'0" WDC	24648180	54.00
TOP CABLE 7'1"-8'0" WDC	24647273	54.00
TOP CABLE 8'1"-9'0" WDC	24647281	61.00
TOP CABLE 9'1"-10'0" WDC	24647299	61.00
BOTTOM CABLE WDC	24647265	54.00
Fire Pin Kit		
50WDC Fire pin Kit (current fire pin , fire pin sleeve, fire pin strike)	48968887	162.00
Lift Finger Kit		
98/9950WDC Finger Kit	47258386	71.00
98/9950WDC Lift Finger Retrofit Kit	47260629	148.00

Prices subject to change without notice.

Description	Part. No.	Non-Finished	US28, 313, 315	US26D	US32D	US10	US4	US3, ✓US15, US26
		List Price						
Center Case								
XP98/99R Center Case Kit Less Cover	050689	502.00	–	–	–	–	–	–
XP98/99R/-F Center Case Kit Less Cover	050690	521.00	–	–	–	–	–	–
XP98/99/-F Center Case Cover Kit	050691	–	–	205.00	215.00	205.00	205.00	235.00
XP98/99/-F Center Case Cover Bracket	050692	28.00	–	–	–	–	–	–
Retrofit Kits								
XP99-909	050676	–	939.00	973.00	1,009.00	966.00	966.00	1,072.00
XP99-954	050675	–	1,044.00	1,078.00	1,113.00	1,072.00	1,072.00	1,155.00
XP98/99 Retrofit Kit Mounting Package	900297	22.00	–	–	–	–	–	–
XP98/99-2SI Conversion Kit RHR	090599	–	1,473.00	1,537.00	1,584.00	1,584.00	1,537.00	1,600.00
XP98/99-2SI Conversion Kit LHR	090600	–	1,473.00	1,537.00	1,584.00	1,584.00	1,537.00	1,600.00
XP98/99-2 Conversion Kit RHR	090601	–	1,198.00	1,263.00	1,311.00	1,311.00	1,263.00	1,324.00
XP98/99-2 Conversion Kit LHR	090602	–	1,198.00	1,263.00	1,311.00	1,311.00	1,263.00	1,324.00
XP98/99-F-2SI Conversion Kit RHR	090794	–	1,659.00	1,723.00	1,771.00	1,771.00	1,723.00	1,786.00
XP98/99-F-2SI Conversion Kit LHR	090795	–	1,659.00	1,723.00	1,771.00	1,771.00	1,723.00	1,786.00
XP98/99-F -2 Conversion Kit RHR	090796	–	1,384.00	1,449.00	1,498.00	1,498.00	1,449.00	1,511.00
XP98/99-F-2 Conversion Kit LHR	090797	–	1,384.00	1,449.00	1,498.00	1,498.00	1,449.00	1,511.00
Mechanism Case								
XP98/99 Rim Mtg. Pkg for >2-1/4" - 2-3/4" Dr	900424	88.00	–	–	–	–	–	–
XP98/99 Rim Mtg. Pkg for >2-3/4" - 3-1/4" Dr	900425	88.00	–	–	–	–	–	–
XP98/99 Rim Mtg. Pkg for >3-1/4" - 3-3/4" Dr	900426	88.00	–	–	–	–	–	–
XP98/99 Rim Mtg. Pkg for >3-3/4" - 4-1/4" Dr	900427	88.00	–	–	–	–	–	–

US32D AND US15 finishes available with XP98 only.
✓ US15 finish available with Series 35 and 98 controls only

Prices subject to change without notice.

Description	Part. No.	Non-Finished
Center Case		
94/9547/48/75 Center Case	CASE.107	236.00
Control Link Pin Kit (w/Retaining Ring)	050585	11.00
Control Link Pin Retaining Ring Pkg/10	090107	12.00
Main Control Link	971712	15.00

			List Price						
Description	Part. No.	Non-Finished	US19	US28	US26D	313	US10	US4	US3, US26
Mechanism Case									
94/9547/48/75 End Cap Package	ECAP.115	–	97.00	–	–	–	–	–	–
INPACT Device Mounting Package	PKGMTG.1001	32.00	–	–	–	–	–	–	–
9547/48/75-F Pushpad	971655	–	–	–	–	–	–	–	322.00
9447/48/75-F Pushpad	971656	–	–	–	–	–	–	–	322.00
Dogging Clip	971659	37.00	–	–	–	–	–	–	–
Dogging Clip Spring	971664	12.00	–	–	–	–	–	–	–
9547/48/75 Pushpad	971763	–	–	242.00	273.00	260.00	300.00	288.00	–
9447/48/75 Pushpad	971764	–	–	242.00	273.00	260.00	300.00	288.00	–
9547/48-F/75-F Pushpad	971765	–	–	242.00	273.00	260.00	300.00	288.00	–
9447/48-F/75-F Pushpad	971766	–	–	242.00	273.00	260.00	300.00	288.00	–
Baseplate Link Pin	971706	15.00	–	–	–	–	–	–	–
9547/48/75 Pushpad	971709	–	–	–	–	–	–	–	322.00
9447/48/75 Pushpad	971710	–	–	–	–	–	–	–	322.00
94/95 EL Kit Hardware	900626	38.00	–	–	–	–	–	–	–
94/95 Dogging Bracket Assembly	BRKT.131	54.00	–	–	–	–	–	–	–

			List Price			
Description	Part. No.	Non-Finished	US28	313	US10	US4
Vertical Rod and Latches						
94/9547/-F Rod Adjustment Kit	KIT.1001	30.00	–	–	–	–
94/9547/-F Rod Adj. Kit - LBR	KIT.1002	20.00	–	–	–	–
94/9547/-F Top Rod Kit	RODASY.121	92.00	–	–	–	–
94/9547/-F Bottom Rod Kit	RODASY.122	92.00	–	–	–	–
94/9547/-F Extension Rod Kit	051808	29.00	–	–	–	–
94/9547/-F Top Latch Kit	050492	282.00	–	–	–	–
94/9547/-F Bottom Latch Kit	050493	229.00	–	–	–	–
94/9547/-F Ratchet Release Kit	106222	–	136.00	136.00	136.00	136.00
94/9547/-F Latch Mtg. Bracket Kit	109324	56.00	–	–	–	–

Prices subject to change without notice.

Description	Part. No.	Non-Finished	List Price US32D	US4, US10B, US19	US10	US3	US32
* E7500 Solenoid Replacement Kit 12VDC FSE	050212	243.00	–	–	–	–	–
* E7500 Solenoid Replacement Kit 12VDC FS	050213	243.00	–	–	–	–	–
* E7500 Solenoid Replacement Kit 24VDC FSE	050214	243.00	–	–	–	–	–
* E7500 Solenoid Replacement Kit 24VDC FS	050215	243.00	–	–	–	–	–
E/SS7500 Female Terminal	050540	12.00	–	–	–	–	–
7500 Auxiliary Bolt Link Sub-Assembly	109347	39.00	–	–	–	–	–
E7500 Hook-up Wire Assy	114140	64.00	–	–	–	–	–
SS7500 Wire Harness Switch Sub-Assembly	114294	104.00	–	–	–	–	–
7500 Latchbolt and Faceplate Sub-Assembly	109773	71.00	–	–	–	–	–
E7500 Switch Connector Assembly	110744	130.00	–	–	–	–	–
7500-2 Cylinder Plug Assembly	111943	188.00	–	–	–	–	–
7500 Lock Mounting Pkg	900532	–	12.00	12.00	12.00	12.00	–
7500 Scalp Plate - 8-32 x 3/8" FPHMS	963080	–	12.00	12.00	12.00	12.00	–
7500 Hsg. Cover - 8-32 x 3/8" UFPHMS	964330	12.00	–	–	–	–	–
7500 Housing 8-32 x 3/8" PPH TF	964390	8.00	–	–	–	–	–
7500 Cyl. Set - 8-32 x 2" Fill SHMS	963954	12.00	–	–	–	–	–
#8 SAE Flat Washer	963984	12.00	–	–	–	–	–
E7500 FSE Roll Pin - 3/32 x 9/16"	964035	12.00	–	–	–	–	–
7500 Auxiliary Bolt	968668	53.00	–	–	–	–	–
7500 Deadlocking Spring	968748	12.00	–	–	–	–	–
7500 Trim Bolt Retractor	968761	12.00	–	–	–	–	–
7500 Thumb Latch Lift	968763	12.00	–	–	–	–	–
7500 Knob Cam	968765	40.00	–	–	–	–	–
7500 Scalp Plate	968766	–	129.00	–	–	–	193.00
7500 Scalp Plate	970872	–	–	133.00	133.00	193.00	–
E/SS7500 Switch Insulator	968770	12.00	–	–	–	–	–
7500 Deadlock Release Arm	968773	29.00	–	–	–	–	–
7500 Auxiliary Bolt Spring	968935	12.00	–	–	–	–	–
7500 Latchbolt Collar	968939	28.00	–	–	–	–	–
7500 Latch Return Spring	969089	12.00	–	–	–	–	–
E7500 FSE Torsion Spring	969107	12.00	–	–	–	–	–
7500 Trim Lock Slide Spring	969364	12.00	–	–	–	–	–
7500 Latch Return Spring Guide	969610	12.00	–	–	–	–	–
7500 Trim Lock Spring Guide	970188	12.00	–	–	–	–	–
7500 Crossbar Input Arm	970318	28.00	–	–	–	–	–
E7500 FS Trim Lock Slide Spring	970546	12.00	–	–	–	–	–
7500 Stem Support	970735	12.00	–	–	–	–	–
E7500 Lever Screw	970861	15.00	–	–	–	–	–
E7500 Lever Spacer	970862	12.00	–	–	–	–	–
E7500 FS Trim Lock Lever	972549	13.00	–	–	–	–	–
E7500 Solenoid Spring	971320	11.00	–	–	–	–	–
7500 Housing Cover	971822	50.00	–	–	–	–	–
7500 Trim Lock Actuator	968793	12.00	–	–	–	–	–
7500-2 Trim Lock Actuator	970531	31.00	–	–	–	–	–
7500-IN Rod Connector	971832	77.00	–	–	–	–	–
CONN 7500 Adapter Harness	106181	31.00	–	–	–	–	–

*For Mortise Lock shipped after 1992. For Mortise Locks shipped before 1992, entire Lock must be replaced

Prices subject to change without notice.

360/370 Series Controls • Parts

Description	Model	Part. No.	List Price Non-Finished	US10B, US26D	US4	US10	US3, ✓US15, US26, SPBLK	US32 US32D
Rod Member Kit 1 3/4" Door	371	109126	121.00	–	–	–	–	–
Rod Member Kit 2 1/4" Door	371	109127	121.00	–	–	–	–	–
Rod Member Kit 1 3/4" Door	377	109132	–	145.00	145.00	169.00	193.00	–
Rod Member Kit 2 1/4" Door	377	109133	–	145.00	145.00	169.00	193.00	–
Rod Member Kit 1 3/4" Door	374	109366	–	202.00	202.00	202.00	258.00	–
Rod Member Kit 2 1/4" Door	374	109367	–	202.00	202.00	202.00	258.00	–
Rod Member Kit 1 3/4" Door	376	109112	77.00	–	–	–	–	–
Rod Member Kit 2" Door	376	900582	–	142.00	142.00	142.00	142.00	–
Rod Member Kit 2 1/4" Door	376	109115	142.00	–	–	–	–	–
Rod Member Kit 1 3/4" - 2" Door	376WDC	900558	133.00	–	–	–	–	–
Rod Member Kit 2 1/4" Door	376WDC	900559	193.00	–	–	–	–	–
Rod Member Kit 1 3/4" Door	237	112843	108.00	–	–	–	–	–
#01 Lever Kit	360	050001	–	215.00	215.00	242.00	293.00	–
#02 Lever Kit	360	050002	–	215.00	215.00	242.00	293.00	–
#03 Lever Kit	360	050003	–	215.00	215.00	242.00	293.00	–
#05 Lever Kit	360	050008	–	215.00	215.00	242.00	293.00	–
#06 Lever Kit	360	050006	–	215.00	215.00	242.00	293.00	–
#07 Lever Kit	360	050007	–	215.00	215.00	242.00	293.00	–
#12 Lever RHR Kit	360	050012	–	215.00	215.00	242.00	293.00	–
#12 Lever LHR Kit	360	050013	–	215.00	215.00	242.00	293.00	–
#16 Lever Kit	360	050009	–	215.00	215.00	242.00	293.00	–
#17 Lever Kit	360	050017	–	215.00	215.00	242.00	293.00	–
#18 Lever Kit	360	050010	–	215.00	215.00	242.00	293.00	–
#01 Lever Kit	371/373/375/378	050750	–	215.00	215.00	242.00	293.00	–
#01 DT Lever Kit	373/375	050751	–	215.00	215.00	242.00	293.00	–
#02 Lever Kit	371/373/375/378	050752	–	215.00	215.00	242.00	293.00	–
#02 DT Lever Kit	373/375	050753	–	215.00	215.00	242.00	293.00	–
#03 Lever Kit	371/373/375/378	050754	–	215.00	215.00	242.00	293.00	–
#03 DT Lever Kit	373/375	050755	–	215.00	215.00	242.00	293.00	–
#06 Lever Kit	371/373/375/378	050756	–	215.00	215.00	242.00	293.00	–
#06 DT Lever Kit	373/375	050757	–	215.00	215.00	242.00	293.00	–
#07 Lever Kit	371/373/375/378	050758	–	215.00	215.00	242.00	293.00	–
#07 DT Lever Kit	373/375	050759	–	215.00	215.00	242.00	293.00	–
#17 Lever Kit	371/373/375/378	050760	–	215.00	215.00	242.00	293.00	–
#17 DT Lever Kit	373/375	050761	–	215.00	215.00	242.00	293.00	–
#12 Lever RHR Kit	371/373/375/378	050762	–	215.00	215.00	242.00	293.00	–
#12 DT Lever RHR Kit	373/375	050763	–	215.00	215.00	242.00	293.00	–
#12 Lever LHR Kit	371/373/375/378	050764	–	215.00	215.00	242.00	293.00	–
#12 DT Lever LHR Kit	373/375	050765	–	215.00	215.00	242.00	293.00	–
LAT Lever Kit	360	051871	-	215.00	215.00	242.00	293.00	-
LON Lever Kit	360	051873	-	215.00	215.00	242.00	293.00	-
M51 Lever Kit	360	114810	–	314.00	314.00	314.00	314.00	–
M51 Lever Kit	360	114812	–	–	–	–	–	314.00
M52 Lever Kit	360	051920	–	314.00	314.00	314.00	314.00	–

✓ US15 finish available with Series 35 and 98 controls, only.

Prices subject to change without notice.

Description	Model	Part. No.	List Price Non-Finished	US10B, US26D	US4	US10	US3, ✓US15, US26, SPBLK	US32 US32D
M52 Lever Kit	360	051922	–	–	–	–	–	314.00
M53 Lever Kit	360	051928	–	314.00	314.00	314.00	314.00	–
M53 Lever Kit	360	051930	–	–	–	–	–	314.00
M54 Lever Kit	360	114826	–	314.00	314.00	314.00	314.00	–
M54 Lever Kit	360	114828	–	–	–	–	–	314.00
M55 Lever Kit	360	051936	–	314.00	314.00	314.00	314.00	–
M55 Lever Kit	360	051938	–	–	–	–	–	314.00
M56 Lever Kit	360	114822	–	314.00	314.00	314.00	314.00	–
M56 Lever Kit	360	114824	–	–	–	–	–	314.00
M57 Lever Kit	360	051914	–	–	–	–	–	314.00
M61LH Lever Kit	360	114814	–	314.00	314.00	314.00	314.00	–
M61LH Lever Kit	360	114816	–	–	–	–	–	314.00
M61RH Lever Kit	360	114818	–	314.00	314.00	314.00	314.00	–
M61RH Lever Kit	360	114820	–	–	–	–	–	314.00
M62LH Lever Kit	360	051916	–	–	–	–	–	314.00
M62RH Lever Kit	360	051918	–	–	–	–	–	314.00
M63LH Lever Kit	360	114842	–	314.00	314.00	314.00	314.00	–
M63LH Lever Kit	360	114844	–	–	–	–	–	314.00
M63RH Lever Kit	360	114846	–	314.00	314.00	314.00	314.00	–
M63RH Lever Kit	360	114848	–	–	–	–	–	314.00
M81 Lever Kit	360	051924	–	314.00	314.00	314.00	314.00	–
M81 Lever Kit	360	051926	–	–	–	–	–	314.00
M82 Lever Kit	360	051932	–	314.00	314.00	314.00	314.00	–
M82 Lever Kit	360	051934	–	–	–	–	–	314.00
M83 Lever Kit	360	114830	–	314.00	314.00	314.00	314.00	–
M83 Lever Kit	360	114832	–	–	–	–	–	314.00
M84 Lever Kit	360	114850	–	314.00	314.00	314.00	314.00	–
M84 Lever Kit	360	114852	–	–	–	–	–	314.00
M85LH Lever Kit	360	114834	–	314.00	314.00	314.00	314.00	–
M85LH Lever Kit	360	114836	–	–	–	–	–	314.00
M85RH Lever Kit	360	114838	–	314.00	314.00	314.00	314.00	–
M85RH Lever Kit	360	114840	–	–	–	–	–	314.00
#03 SS Lever Kit	360	051861	–	–	–	–	–	293.00
#06 SS Lever Kit	360	051863	–	–	–	–	–	293.00
#17 SS Lever Kit	360	051865	–	–	–	–	–	293.00
LAT SS Lever Kit	360	051867	–	–	–	–	–	293.00
LON SS Lever Kit	360	051869	–	–	–	–	–	293.00
Thumbturn Kit	374/376/377	050592	–	206.00	206.00	206.00	317.00	–
Thumbturn Kit	360	050593	–	206.00	206.00	206.00	317.00	–
Backplate	360	050595	21.00	–	–	–	–	–
Backplate LHR	371/3/4/5/6/7/8	050596	21.00	–	–	–	–	–
Backplate RHR	371/3/4/5/6/7/8	050597	21.00	–	–	–	–	–
Backplate LDT	373/375	050598	21.00	–	–	–	–	–

✓ US15 finish available with Series 35 and 98 controls, only.

Prices subject to change without notice.

Description	Model	Part. No.	Non-Finished	US10B, US26D	US4	US10, US19, SPBLK	US3, US26
NL Cylinder Plate	371/3/4/5/6/7/8	050599	15.00	–	–	–	–
TL Cylinder Plate	371/3/4/5/6/7/8	050600	15.00	–	–	–	–
Cylinder Lock Nut & Washer	371/3/4/5/6/7/8	109111	21.00	–	–	–	–
Cylinder Locknut	360	050526	13.00	–	–	–	–
Cylinder Lock Pkg/2	371/3/4/5/6/7/8	090090	12.00	–	–	–	–
Cylinder Auxiliary Package	360	900622	29.00	–	–	–	–
Lever Adjustment Block	371/3/4/5/6/7/8	050576	12.00	–	–	–	–
Lever Bushing	360L	050579	12.00	–	–	–	–
Lever Bushing	371/373/375/378	050601	12.00	–	–	–	–
Lever Control Spring LHR Pkg/4	371/373/375/378	090091	15.00	–	–	–	–
Lever Control Spring RHR Pkg/4	371/373/375/378	090092	15.00	–	–	–	–
Lever Return Spring Pkg/2	360L/L-BE	090093	15.00	–	–	–	–
Lever Shaft Lock	371/373/375/378	050602	12.00	–	–	–	–
Lever Spindle	373	967480	12.00	–	–	–	–
Lever Stop Block	373/375	050603	12.00	–	–	–	–
Mounting Stud Pkg/2	360	090094	12.00	–	–	–	–
Mounting Stud Pkg/2	371/373/378	090095	12.00	–	–	–	–
Mounting Stud Pkg/2	374/376/377	090096	12.00	–	–	–	–
Cam - Input	360L/L-BE	050604	11.00	–	–	–	–
Cam - Output	360	050605	32.00	–	–	–	–
Cam - Vertical Rod	371/374/376/377	050606	29.00	–	–	–	–
Cam Retaining Screw (Pkg/4)	371/373/375/378	090097	12.00	–	–	–	–
Dogging Spring and Guide Kit	371/3/4/5/6/7/8	050607	12.00	–	–	–	–
Locking Member	360	050608	38.00	–	–	–	–
Mortise Adaptor	373/375	050609	48.00	–	–	–	–
Pin - Spirol 3/32 x 19/32 Pkg/4	373/375	090098	12.00	–	–	–	–
Shear Pin Kit	360	050611	12.00	–	–	–	–
Pine Tree Clip Pkg/10	360	090099	11.00	–	–	–	–
Rub Plate	374/377	050612	—	77.00	83.00	83.00	83.00
Short Arm Hex Wrench 1/8"	374/377	050613	13.00	—	–	–	–
Short Hex Key 3/32"	371/376	050614	12.00	—	–	–	–
Socket Set Screw 1/4-20 x 1/4	374/377	090100	12.00	—	–	–	–
Socket Set Screw 10-32 x 1/4 Pkg/10	360	090101	12.00	—	–	–	–
Spring - Locking Torsion	360	050615	9.00	—	–	–	–
Tailpiece	360	050587	10.00	—	–	–	–
Tailpiece Guide Pkg/10	360	050156	20.00	—	–	–	–
Thumbturn Control Spring & Washer Kit	374/376/377	050616	15.00	—	–	–	–
Thumbturn Sleeve	374/376/377	050619	40.00	—	–	–	–
Washer - Bearing	371/3/4/5/6/7/8	050621	29.00	—	–	–	–
Washer - Locking Pkg/10	371/373/375	090102	12.00	—	–	–	–
Washer - Wave Spring Pkg/10	360/371/373/375/378	090103	11.00	—	–	–	–
Screw Package 1 3/4" Dr	371/373/378	900807	–	21.00	21.00	21.00	21.00
Screw Package 2 1/4" Dr	371/373/378	900808	–	29.00	29.00	29.00	29.00
Screw Package 1 3/4" Dr	374/376/377	900809	–	21.00	21.00	21.00	21.00
Screw Package 2 1/4" Dr	374/376/377	900810	–	29.00	29.00	29.00	29.00
Screw Package 1 3/4" Dr	375	900883	–	21.00	21.00	21.00	21.00
Screw Package 2 1/4" Dr	375	900884	–	29.00	29.00	29.00	29.00
WDC Cover Plate 1 3/4"	376T-WDC	900555	–	49.00	63.00	49.00	116.00
WDC Cover Plate 2 1/4"	376T-WDC	900556	–	49.00	63.00	49.00	116.00

Prices subject to change without notice.

210/230 Series Trims

Description	Part. No.	List Price Non-Finished	List Price SP28, SP313
230DT x 330/350 Screw Package 1 3/4" Dr	050140	—	15.00
230DT x 330/350 Screw Package 2 1/4" Dr	050141	—	15.00
230L Cylinder Locknut	050526	13.00	—
210K Bracket & Booster Assembly	109871	65.00	—
210K Spiral Cam Sub-Assembly	109872	48.00	—
210K Cylinder Knob Sub-Assembly	109873	—	121.00
210K Trim Sub-Assembly	109879	—	123.00
210K Rose, Hub and Cap Assy	110343	—	40.00
230L Tailpiece Auxiliary	900894	20.00	—
210K Wave Spring Washer Pkg/10	090103	11.00	—
210/230 Cylinder Retaining Cup	968201	20.00	—
210/230 Cylinder Cup & Tailpiece Lead Pkg	900581	12.00	—
210/230 Tailpiece Guide Lead Pkg/10	050156	20.00	—
210K Knob Spacer	969140	15.00	—
210K Knob	969157	—	32.00
210K-BE Knob	969352	—	21.00
230TP Cam	969903	12.00	—
230TP Slider	969904	12.00	—
230TP Locking Cam	969906	12.00	—
230TP Locking Cam Latch	969908	20.00	—
230TP Compression Spring	969909	12.00	—
230TP Thumbpiece	969910	—	72.00
210K/L Spindle Shaft	970979	12.00	—
230L Stud	971245	13.00	—
230L Cylinder Collar	971249	—	25.00
230L Locking Plunger	971497	12.00	—
230L Locking Slider	971259	9.50	—
* 230L Lever Cam	050813	12.00	—
* 230L Shear Pin Kit w/ Retaining Pin	050611	12.00	—

* For 230L trim shipped after 3/3/14

386/388 Series Trims

Description	Part. No.	List Price Non-Finished
386 Housing Retainer Pkg/2	090104	11.00
386/388 Cylinder Retainer Pkg	900624	20.00
386 Mounting Stud Kit	050584	13.00
386 Mounting Stud Set Screw Pkg/2	090105	9.50
388 Mounting Stud Pkg/2	090106	13.00
392-6 Mounting Package	900955	13.00

Prices subject to change without notice.

Description	Part. No.	Non-Finished	List Price US26D	US10B	US10	US4	US3, US26, SPBLK
550/110 Series Trims							
555/556 Cylinder Disc & Cam Assembly	101212	188.00	–	–	–	–	–
550/555/556 Pull Bar Assembly	108705	–	229.00	237.00	303.00	229.00	303.00
550DT Screw Package	900760	–	54.00	54.00	54.00	54.00	54.00
555NL Screw Package	900761	54.00	–	–	–	–	–
556NL Screw Package	900784	–	13.00	13.00	13.00	13.00	13.00
556 Rod Member	952820	125.00	–	–	–	–	–
550/555/556 Special Cylinder Screw - 1 3/4" Door	959055	12.00	–	–	–	–	–
550/555/556 Special Cylinder Screw - 2 1/4" Door	959056	12.00	–	–	–	–	–
550/555/556 Hex Stud	959560	12.00	–	–	–	–	–
555 Cylinder Latch Release RH	959563	48.00	–	–	–	–	–
555NL-MD Cylinder Spacer Collar - 1 3/4" Door	960003	29.00	–	–	–	–	–
110NL Cylinder Spacer Collar	960060	48.00	–	–	–	–	–
555 Cylinder Latch Release LH	960109	48.00	–	–	–	–	–
110NL-WD Cylinder Spacer Collar	960316	48.00	–	–	–	–	–
555NL Cylinder Spacer Collar - 2 1/4" Door	960317	29.00	–	–	–	–	–
556NL Cylinder Spacer Collar - 1 3/4" Door	960676	29.00	–	–	–	–	–
556NL Cylinder Spacer Collar - 2 1/4" Door	960689	29.00	–	–	–	–	–
550/555/556 Sex Bolt Extension	960902	13.00	–	–	–	–	–
110NL Cylinder Assembly Countersink Washer	961180	13.00	–	–	–	–	–
555NL Cylinder Assembly Cylinder Base	961280	–	56.00	55.00	55.00	50.00	55.00
1/8" Short Arm Hex Wrench	050613	13.00	–	–	–	–	–
556 3/32 Short Hex Key	050614	12.00	–	–	–	–	–
550/555/556 Socket Set Screw	963581	12.00	–	–	–	–	–
550/555/556 Pull Base	965310	–	77.00	77.00	84.00	77.00	84.00
555/556 Cylinder Pull Base	965312	–	60.00	60.00	71.00	55.00	71.00
550/555/556 Cylinder Hole Cover	965317	–	56.00	56.00	87.00	56.00	87.00
556NL Cylinder Assembly Cylinder Base	966985	–	125.00	125.00	145.00	125.00	145.00
110NL-MD Cylinder Collar	967291	–	53.00	53.00	60.00	53.00	60.00
110NL Cylinder Assembly Cylinder Disc	971593	71.00	–	–	–	–	–
880/606/608 Series Trims *							
216D Cylinder Anchor Plate 880 Trim	032114	18.00	–	–	–	–	–
606K/880K Orbit Knob Assembly	110544	–	182.00	182.00	182.00	182.00	274.00
606K/880K Orbit Knob Assembly (DT)	110547	–	182.00	182.00	182.00	182.00	274.00
880 Screw Package 2 1/4" Dr	900531	–	21.00	30.00	21.00	21.00	21.00
880 Screw Package 1 3/4" Dr	900533	–	12.00	29.00	13.00	13.00	13.00
880-V Screw Package Trim	900542	12.00	–	–	–	–	–
880 Screw Package (Bottom Stud)	900771	–	12.00	12.00	12.00	12.00	12.00
880DT-V SA Screw Package	900783	–	15.00	15.00	15.00	15.00	15.00
606DT/NL/TP Screw Package	900772	–	12.00	12.00	12.00	12.00	12.00
606K/606K-DT Screw Package	900782	–	15.00	15.00	15.00	15.00	15.00
608 Screw Package	900776	–	13.00	13.00	13.00	13.00	13.00
880 Series Hex Stud	956760	12.00	–	–	–	–	–
880 Pull Grip	972467	–	–	131.00	–	108.00	174.00
880 Pull Grip	972466	–	131.00	–	–	–	–
880-M/V Thumbpiece	959575	–	69.00	69.00	63.00	63.00	97.00
880 Thumbpiece Axle	959603	12.00	–	–	–	–	–

* For Trims shipped after October 1989. Otherwise, see service replacement page 168.

Prices subject to change without notice.

Description	Part. No.	Non-Finished	US26D, *US32D	US10B	US10	US4	US3, ✓US15, US26, *US32 SPBLK
			List Price				
880/606/608 Series Trims*							
880-M Cylinder Collar	961267	–	45.00	45.00	54.00	45.00	54.00
880DT-V-SA 12-24 x 1/2" UFPHMS	963011	11.00	–	–	–	–	–
606K/880K Roll Pin (3-32 x 7/8)	963196	11.00	–	–	–	–	–
880NL/DT 12-24 x 3/8" UFPHMS	963579	12.00	–	–	–	–	–
606K/880K 3/8" Lockwasher	963703	11.00	–	–	–	–	–
606K/880K-DT/K-NL Hex Nut	963704	11.00	–	–	–	–	–
880-R Cylinder Collar	965226	–	45.00	45.00	54.00	45.00	54.00
880 TP Bracket Screw	965237	11.00	–	–	–	–	–
606/880 DT Spindle Lock	965568	11.00	–	–	–	–	–
Extended Spindle - 880K	968883	199.00	–	–	–	–	–
880TP Thumbpiece Bracket	969353	12.00	–	–	–	–	–
880K Booster Body	970137	32.00	–	–	–	–	–
880K Booster Torsion Spring	970138	11.00	–	–	–	–	–
880K Booster Spacer	970139	11.00	–	–	–	–	–
880K Flange Bearing - 880K	970159	13.00	–	–	–	–	–
608/880TP-R Thumbpiece	970488	–	69.00	69.00	97.00	63.00	97.00

* For Trims shipped after October 1989. Otherwise, see service replacement page 168.

990/996 Series Trim							
#01 Lever - 992 RMV/994/996 L-DT/L-NL	050001	–	215.00	215.00	242.00	215.00	293.00
#02 Lever - 992 RMV/994/996 L-DT/L-NL	050002	–	215.00	215.00	242.00	215.00	293.00
#03 Lever - 992 RMV/994/996 L-DT/L-NL	050003	–	215.00	215.00	242.00	215.00	293.00
#05 Lever - 992 RMV/994/996 L-DT/L-NL	050008	–	215.00	215.00	242.00	215.00	293.00
#06 Lever - 992 RMV/994/996 L-DT/L-NL	050006	–	215.00	215.00	242.00	215.00	293.00
#07 Lever - 992 RMV/994/996 L-DT/L-NL	050007	–	215.00	215.00	242.00	215.00	293.00
#12 Lever - 992 RMV/994/996 L-DT/L-NL (RHR)	050012	–	215.00	215.00	242.00	215.00	293.00
#12 Lever - 992 RMV/994/996 L-DT/L-NL (LHR)	050013	–	215.00	215.00	242.00	215.00	293.00
#16 Lever - 992 RMV/994/996 L-DT/L-NL	050009	–	215.00	215.00	242.00	215.00	293.00
#17 Lever - 992 RMV/994/996 L-DT/L-NL	050017	–	215.00	215.00	242.00	215.00	293.00
#18 Lever - 992 RMV/994/996 L-DT/L-NL	050010	–	215.00	215.00	242.00	215.00	293.00
#01 Lever - 994/996 RMV L/L-BE	050732	–	215.00	215.00	242.00	215.00	293.00
#02 Lever - 994/996 RMV L/L-BE	050733	–	215.00	215.00	242.00	215.00	293.00
#03 Lever - 994/996 RMV L/L-BE	050734	–	215.00	215.00	242.00	215.00	293.00
#05 Lever - 994/996 RMV L/L-BE	050735	–	215.00	215.00	242.00	215.00	293.00
#06 Lever - 994/996 RMV L/L-BE	050736	–	215.00	215.00	242.00	215.00	293.00
#07 Lever - 994/996 RMV L/L-BE	050737	–	215.00	215.00	242.00	215.00	293.00
#12 Lever - 994/996 RMV L/L-BE RHR	050738	–	215.00	215.00	242.00	215.00	293.00
#12 Lever - 994/996 RMV L/L-BE LHR	050739	–	215.00	215.00	242.00	215.00	293.00
#16 Lever - 994/996 RMV L/L-BE	050740	–	215.00	215.00	242.00	215.00	293.00
#17 Lever - 994/996 RMV L/L-BE	050741	–	215.00	215.00	242.00	215.00	293.00
#18 Lever - 994/996 RMV L/L-BE	050742	–	215.00	215.00	242.00	215.00	293.00
LON Lever -996 RMV L/L-BE	051874	–	215.00	215.00	242.00	215.00	293.00
LAT Lever - 996 RMV L/L-BE	051872	–	215.00	215.00	242.00	215.00	293.00

✓ US15 finish available with device series 98 trims

Prices subject to change without notice.

990/996 Series Trim (continued)

Description	Part. No.	Non-Finished	US26D	US10B	US10	US4	US3, ✓US15, US26, SPBLK	US32 US32D
			List Price					
M51 Lever Kit - 996 RMV L/L-BE	114811	–	314.00	314.00	314.00	314.00	314.00	–
M51 Lever Kit - 996 RMV L/L-BE	114813	–	–	–	–	–	–	314.00
M52 Lever Kit - 996 RMV L/L-BE	051921	–	314.00	314.00	314.00	314.00	314.00	–
M52 Lever Kit - 996 RMV L/L-BE	051923	–	–	–	–	–	–	314.00
M53 Lever Kit - 996 RMV L/L-BE	051929	–	314.00	314.00	314.00	314.00	314.00	–
M53 Lever Kit - 996 RMV L/L-BE	051931	–						314.00
M54 Lever Kit - 996 RMV L/L-BE	114827	–	314.00	314.00	314.00	314.00	314.00	–
M54 Lever Kit - 996 RMV L/L-BE	114829	–						314.00
M55 Lever Kit - 996 RMV L/L-BE	051937	–	314.00	314.00	314.00	314.00	314.00	–
M55 Lever Kit - 996 RMV L/L-BE	051939	–	–	–	–	–	–	314.00
M56 Lever Kit - 996 RMV L/L-BE	114823	–	314.00	314.00	314.00	314.00	314.00	–
M56 Lever Kit - 996 RMV L/L-BE	114825	–	–	–	–	–	–	314.00
M57 Lever Kit - 996 RMV L/L-BE	051915	–	–	–	–	–	–	314.00
M61LH Lever Kit - 996 RMV L/L-BE	114815	–	314.00	314.00	314.00	314.00	314.00	
M61LH Lever Kit - 996 RMV L/L-BE	114817	–	–	–	–	–	–	299.00
M61RH Lever Kit - 996 RMV L/L-BE	114819	–	314.00	314.00	314.00	314.00	314.00	–
M61RH Lever Kit - 996 RMV L/L-BE	114821	–	–	–	–	–	–	314.00
M62LH Lever Kit - 996 RMV L/L-BE	051917	–	–	–	–	–	–	314.00
M62RH Lever Kit - 996 RMV L/L-BE	051919	–	–	–	–	–	–	314.00
M63LH Lever Kit - 996 RMV L/L-BE	114843	–	314.00	314.00	314.00	314.00	314.00	
M63LH Lever Kit - 996 RMV L/L-BE	114845	–	–	–	–	–	–	314.00
M63RH Lever Kit - 996 RMV L/L-BE	114847	–	314.00	314.00	314.00	314.00	314.00	–
M63RH Lever Kit - 996 RMV L/L-BE	114849	–	–	–	–	–	–	314.00
M81 Lever Kit - 996 RMV L/L-BE	051925	–	314.00	314.00	314.00	314.00	314.00	–
M81 Lever Kit - 996 RMV L/L-BE	051927	–	–	–	–	–	–	314.00
M82 Lever Kit - 996 RMV L/L-BE	051933	–	314.00	314.00	314.00	314.00	314.00	–
M82 Lever Kit - 996 RMV L/L-BE	051935	–	–	–	–	–	–	314.00
M83 Lever Kit - 996 RMV L/L-BE	114831	–	314.00	314.00	314.00	314.00	314.00	–
M83 Lever Kit - 996 RMV L/L-BE	114833	–	–	–	–	–	–	314.00
M84 Lever Kit - 996 RMV L/L-BE	114851	–	314.00	314.00	314.00	314.00	314.00	–
M84 Lever Kit - 996 RMV L/L-BE	114853	–	–	–	–	–	–	314.00
M85LH Lever Kit - 996 RMV L/L-BE	114835	–	314.00	314.00	314.00	314.00	314.00	–
M85LH Lever Kit - 996 RMV L/L-BE	114837	–	–	–	–	–	–	314.00
M85RH Lever Kit - 996 RMV L/L-BE	114839	–	314.00	314.00	314.00	314.00	314.00	–
M85RH Lever Kit - 996 RMV L/L-BE	114841	–	–	–	–	–	–	314.00
#03 SS Lever Kit - 996 RMV L/L-BE	051862	–	–	–	–	–	–	293.00
#06 SS Lever Kit - 996 RMV L/L-BE	051864	–	–	–	–	–	–	293.00
#17 SS Lever Kit - 996 RMV L/L-BE	051866	–	–	–	–	–	–	293.00
LON SS Lever Kit - 996 RMV L/L-BE	051870	–	–	–	–	–	–	293.00
LAT SS Lever Kit - 996 RMV L/L-BE	051868	-	–	–	–	–	293.00	293.00
990 x 330/350 Screw Package 1 3/4" Door	050140	–	15.00	15.00	15.00	15.00	15.00	–
990 x 330/350 Screw Package 2 1/4" Door	050141	–	15.00	15.00	15.00	15.00	15.00	–
Tailpiece Guide Lead Kit Pkg/10	050156	20.00	–	–	–	–	–	–
Wave Spring Washer - 992L Pkg/10	090103	11.00	–	–	–	–	–	–

✓ US15 finish available with device series 98 trims

Prices subject to change without notice.

990/996 Series Trim (continued)

Description	Part. No.	List Price Non-Finished	US26D	US10B	US10	US4	US3, ✓US15, US26, SPBLK	US32 US32D
Orbit Knob Assembly - 991K	110537	–	123.00	145.00	198.00	164.00	209.00	–
Slider Sub-Assembly - 991K-R/V	110768	129.00	–	–	–	–	–	–
Slider Sub-Assembly - 992L-R/V	110769	142.00	–	–	–	–	–	–
Slider Sub-Assembly - 994/996L-R/V	111869	164.00	–	–	–	–	–	–
Slider Sub-Assembly - 994/996L-M	112462	164.00	–	–	–	–	–	–
990 Screw Package 1 3/4" - 2 1/4" Door	900853	–	29.00	29.00	29.00	29.00	29.00	
991/992/994/996 Screw Package	900920	12.00	–	–	–	–	–	–
Cam-996	971132	36.00	–	–	–	–	–	–
392-7 Mounting Pack	900954	–	13.00					
Hex Stud - 990 Trim	956760	12.00	–	–	–	–	–	–
Pull Grip - 990	972467	–	–	131.00	–	108.00	174.00	–
Pull Grip - 990	972466	–	131.00	–	–	–	–	–
Thumbpiece - 696/990-M	959575	–	69.00	69.00	63.00	63.00	97.00	–
Thumbpiece Axle - 696/990	959603	12.00	–	–	–	–	–	–
Cylinder Collar - 696/990-M	961267		45.00	45.00	54.00	45.00	54.00	–
Flat Washer - 992K-DT/NL/BE/992L	963105	13.00	–	–	–	–	–	–
12-24 x 3/8" UFPHMS - 990NL/DT	963579	12.00	–	–	–	–	–	–
Retaining Ring - 991K	963767	12.00	–	–	–	–	–	–
Retaining Ring - 992L	964097	12.00	–	–	–	–	–	–
10-24 x 1/2" Socket Set Cap Screw	964183	12.00	–	–	–	–	–	–
Retaining Ring - 991K-DT/NL/BE/992L	964285	12.00	–	–	–	–	–	–
1/4-20 x 5/8" Socket Set Screw	964353	12.00	–	–	–	–	–	–
Cylinder Collar - 990-R	965226	–	45.00	45.00	54.00	45.00	54.00	–
TP Bracket Screw - 990TP	965237	11.00	–	–	–	–	–	–
Cylinder Retaining Cup - 990/996 Trim	968201	20.00	–	–	–	–	–	–
Spring - 991K	969012	12.00	–	–	–	–	–	–
Thumbpiece Bracket - 990TP	969353	12.00	–	–	–	–	–	–
R&V Finger - 991K/992L	969545	15.00	–	–	–	–	–	–
DT Yoke - 991K/992L (DT and NL)	970117	83.00	–	–	–	–	–	–
Flange Bearing - 991K	970159	13.00	–	–	–	–	–	–
Thumbpiece - 990TP-R	970488	–	69.00	69.00	97.00	63.00	97.00	–
Slider Sub-Assembly - 992L-M	971012	142.00	–	–	–	–	–	–
DT Cam Pin - 992/994/996	971015	13.00	–	–	–	–	–	–
Hex Stud - 991K/992L	971440	12.00	–	–	–	–	–	–
Lift Spring - 992/994	971573	8.00	–	–	–	–	–	–
Shear Pin Kit - 992/994/996 w/retaining ring	050611	12.00	–	–	–	–	–	–
Mounting Stud - 994/996	971585	12.00	–	–	–	–	–	–
E996 Mort Conv to E Kit	050673	714.00	–	–	–	–	–	–
E996 R/VC Conv to E Kit	050672	687.00	–	–	–	–	–	–
E996 Locking Mech Kit (includes solenoid)	050671	430.00	–	–	–	–	–	–
E996 Wire Harness (Cable)	CABLE.10038	44.00	–	–	–	–	–	–
E996 Solenoid Kit	050814	115.00	–	–	–	–	–	–
Lever Bushing	050579	12.00	–	–	–	–	–	–

✓ US15 finish available with device series 98 trims, only.

Prices subject to change without notice.

Description	Part. No.	List Price Non-Finished	US26D	SP313, US10B	US10	US4	US3, US26, SPBLK
Optional Trim							
696/697DT x 330/350 Screw Package 1 3/4" Dr	050142	–	15.00	15.00	15.00	15.00	15.00
696/697DT x 330/350 Screw Package 2 1/4" Dr	050143	–	15.00	15.00	15.00	15.00	15.00
696/697 Cylinder Hardware Assembly 1 3/4" Dr	109369	–	97.00	97.00	145.00	125.00	165.00
696/697 Cylinder Hardware Assembly 2 1/4" Dr	109130	–	97.00	97.00	145.00	125.00	165.00
696/697 Screw Package 1 3/4" Door	900839	–	12.00	12.00	12.00	12.00	12.00
696/697 Screw Package 2 1/4" Door	900840	–	12.00	12.00	12.00	12.00	12.00
Pull Grip - 608/696 Trim	972467	–	–	131.00	–	108.00	174.00
Pull Grip - 608/696 Trim	972466	–	131.00	–	–	–	–
Thumbpiece - 608 Trim	959575	–	69.00	69.00	63.00	63.00	97.00
Thumbpiece Axle - 608 Trim	959603	12.00	–	–	–	–	–
Sex Bolt Extension - 606/608 Trim	960902	13.00	–	–	–	–	–
Thumbpiece Bracket - 608TP-R/V	960921	23.00	–	–	–	–	–
3/8" Lockwasher - 606K	963703	11.00	–	11.00	–	–	–
Hex Nut - 606K-DT/K-NL	963704	11.00	–	–	–	–	–
1/4-20 3/4" Socket Set Screw	964355	12.00	–	–	–	–	–
Thumbpiece Bracket - 608TP-M	965130	50.00	–	–	–	–	–
Sex Bolt Head - 606/608 Trim	967329	–	15.00	15.00	15.00	15.00	15.00
Pull Grip - 697 Trim	968694	–	221.00	221.00	221.00	221.00	258.00
Sex Bolt Head - 696/697 Trim	968918	–	15.00	15.00	15.00	15.00	15.00
Hex Stud - 696/697 Trim	969091	12.00	–	–	–	–	–
Sex Bolt Extension - 696/697 Trim	969092	15.00	–	–	–	–	–
Thumbpiece - 608TP-R	970488	–	69.00	69.00	97.00	63.00	97.00
Thumbpiece - 696/697-R/V	970491	–	69.00	69.00	97.00	63.00	97.00
334 Cylinder Collar	961267	–	45.00	45.00	54.00	45.00	54.00
940 Trim Cam Service Kit	040171	130.00	–	–	–	–	–
940 Tail Piece Mounting Pkg	900390	22.00	–	–	–	–	–

Prices subject to change without notice.

Description	Part. No.	List Price Non-Finished	SP28, SP313	US4, US10, US28, 313
5654/5754 Fitting Set	050130	–	–	193.00
5654/5754 Top Fitting & Cover	050135	–	–	117.00
KR54 Retrofit Kit	050168	–	485.00	–
KR54-F Retrofit Kit	050169	–	534.00	–
5654/5754 Bottom Fitting	050190	–	–	117.00
9954 Fitting Set	050241	–	365.00	–
1654/4954 Fitting Set	050330	–	141.00	–
1654/4954 Top Fitting & Cover	050335	–	69.00	–
4754/4854 Fitting Set	050371	–	285.00	–
4754/4854 Top Electrical Fitting & Cover	050381	–	217.00	–
9854 Top Mullion Fitting Kit	050383	–	217.00	–
1654/4754/4854/4954 Bottom Fitting	050390	–	67.00	–
9854/9954 Top Fitting & Cover	050391	–	177.00	–
98/9954 Bottom Fitting & Cover	050392	–	177.00	–
KR Mullion Cylinder Lock Nut	050526	13.00	–	–
Weatherstripping (10') Use 2 Per Mullion	050580	30.00	–	–
Mullion (Top) Screw Package	900400	18.00	–	–
Mullion (Bottom) Screw Package	900402	25.00	–	–
KR1654/4954 Mullion Mounting Package	900409	–	72.00	–
KR9854/9954 Mullion Mounting Package	900410	–	60.00	–
9954 (Bottom) Screw Package	900411	24.00	–	–
9954 (Top) Screw Package	900413	24.00	–	–
4754/4854/4954 Top Fitting Cover	961047	–	21.00	–
5654 Mullion Edging - 7'	965712	–	–	65.00
5654 Mullion Edging - 8'	965713	–	–	72.00
5654 Mullion Edging - 10'	965714	–	–	81.00
9954 Top Fitting Cover	968645	–	21.00	–
KR Inner Mullion Back Cover Plate	971187	–	24.00	–
KR Shim Plate	971212	11.00	–	–
KR-F Shim Plate	971313	–	43.00	–
KR9954 Top Fitting	971312	–	119.00	–
KR9854/9954 Fusible Spacer	971316	–	63.00	–
KR Mullion Cylinder Locking Washer	971328	17.00	–	–
KR1654/4954 Top Fitting	971340	–	104.00	–
MT54 Wall Mounted Storage Kit	050581	–	159.00	–
Female Receptacle Wire Assy	105988	77.00	–	–
Male Receptacle Wire Assy	105987	89.00	–	–
Mullion Stabilizers	050054	–	94.00	–

Prices subject to change without notice.

Screw Packs/ Shims/ Miscellaneous

Description	Part. No.	List Price Non-Finished	US32D	US10	US3, US4, US10B, US32	SP28, SP313 SP4, SP10, US19
Shims						
Shim 1409 Strike	959953	15.00	–	–	–	–
Shim 1606 Strike	961084	21.00	–	–	–	–
Shim 248L-4 Strike	969280	12.00	–	–	–	–
Shim 264/299F/499F Strike	945521	12.00	–	–	–	–
Shim 266 Strike	967333	–	48.00	–	48.00	–
Shim 299 Strike	970321	12.00	–	–	–	–
Shim 268 Strike Auxilliary Bolt	967269	12.00	–	–	–	–
909 Strike Shim Pkg/4	090108	65.00	–	–	–	–
Mullion Stabilizer Shim	961530	11.00	–	–	–	–
99 Hinge Stile Shim	971010	–	–	–	–	48.00
Screw Packs						
Screw Package 268/472/473	900252	12.00	–	–	–	–
Screw Package 1408	900253	12.00	–	–	–	–
Screw Package 1409/1410/1439	900254	15.00	–	–	–	–
Screw Package 248L-4/264/266/1606	900263	12.00	12.00	–	12.00	–
Screw Package 4263/4582	900281	–	13.00	–	13.00	–
Screw Package 4268	900284	–	12.00	20.00	12.00	–
Screw Package 338	900285	12.00	–	–	–	–
Screw Package 499-F	900289	15.00	–	–	–	–
Screw Package 575/575-2/576/4690	900532	–	12.00	12.00	12.00	–
Screw Package 889 Cover Plate	900820	–	15.00	15.00	15.00	–
Screw Package 99GBK-R x 499F 1 3/4" Dr	900847	–	21.00	21.00	21.00	–
Screw Package 99GBK-R x 499F 2 1/4" Dr	900848	–	21.00	21.00	21.00	–
Screw Package 99GBK-R/M/V	900849	20.00	–	–	–	–
Screw Package RG27	900888	13.00	–	–	–	–
Miscellaneous						
DL Lubricant 1 oz.	091091	11.00	–	–	–	–
Monitor Strike Spacer Plate - 4263/4268	966671	15.00	–	–	–	–
Strike Hook 499-F	661481	–	124.00	124.00	124.00	–
Strike Plate 299	970323	12.00	–	–	–	–
Strike Pop Rivet 1409/1439	963074	11.00	–	–	–	–
Strike Hook 499-F	661481	–	124.00	124.00	124.00	–
Strike Pop Rivet 1409/1439	963074	12.00	–	–	–	–
1409 Adjusting Block	959952	15.00	–	–	–	–
1409/1410 Wear Strip	960012	25.00	–	–	–	–
Latch Guard Mounting Bracket	970472	15.00	–	–	–	–
Security Screw Hex Key 5/32"	010059	20.00	–	–	–	–
Security Screw Hex Key 1/8"	010060	20.00	–	–	–	–
Security Screw Hex Key 7/32"	010061	20.00	–	–	–	–
Security Screw Hex Key 3/16"	010062	20.00	–	–	–	–
299F Strike Adapter	050996-622	–	–	–	–	162.00

Prices subject to change without notice.

Maintenance Kit and Replacement Packages

Description	Part. No.	List Price
98/99 Maintenance Kit	050046	1,175.00
Control Link Pin Pkg/10	090031	15.00
33/35/98/99 Touch Bar Guide Pkg/10	090049	13.00
NL Drive Screw Pkg/10	090074	20.00
98/9927/27-F Auxiliary Bolt Spring Pkg/ 10	090076	12.00
Bolt Return Spring Pkg/10	090065	12.00
#10 External Tooth Lock Washer Pkg/10	PKGSRV.1007	13.00
Top Latch Compression Spring Pkg/10	090056	12.00
Truarc Retaining Ring T5304-18 Pkg/10	090107	12.00
Shear Pin - 360/992/994/996 Pkg/50	PKGSRV.1010	63.00
992L Lift Spring Pkg/20	PKGSRV.1011	23.00
1/4-20 Hex Stud - 991/992 Pkg/10	PKGSRV.1012	30.00
Truarc Retaining Ring 5160-42 Pkg/10	PKGSRV.1013	20.00
10-32 X 1/4" UFPHMS w/Nylock Pkg/6	090059	12.00
10-24 x 3/4" PPHMS Pkg/10	PKGSRV.1015	13.00
10-24 x 1" PPHMS Pkg/20	PKGSRV.1016	15.00
8-32 X 1/4" UFPHMS Pkg/20	PKGSRV.1018	12.00
LBR Latch Mtg Screw Pkg/10	PKGSRV.1019	14.00
1/4-20 X 3/4" UFPHMS Pkg/10	PKGSRV.1020	21.00
10-24 X 1 3/8" PPHMS Pkg/20	PKGSRV.1022	21.00
10-24 X 3/4" FPHMS Pkg/10	PKGSRV.1023	13.00
99 Cover Retaining Clip Pkg/10	PKGSRV.1024	13.00
12-24 1/2" Hex Wshr Hd Tapping Screw Pkg/10	090073	10.00

Prices subject to change without notice.

Description	Part. No.	List Price
Box Assemblies		
6111, 6113, 6213 12VDC FS Box Assembly	111743	393.00
6111, 6113, 6213 12VDC FSE Box Assembly	111744	393.00
6111, 6113, 6213 24VDC FS Box Assembly	111745	393.00
6111, 6113, 6213 24VDC FSE Box Assembly	111746	393.00
6111, 6113, 6213 12VDC FS DS Box Assembly	111747	571.00
6111, 6113, 6213 12VDC FSE DS Box Assembly	111748	571.00
6111, 6113, 6213 24VDC FS DS Box Assembly	111749	571.00
6111, 6113, 6213 24VDC FSE DS Box Assembly	111750	571.00
6111, 6113, 6213 12VDC FS DS-LC Box Assembly	112772	571.00
6111, 6113, 6213 12VDC FSE DS-LC Box Assembly	112773	571.00
6111, 6113, 6213 24VDC FS DS-LC Box Assembly	112774	571.00
6111, 6113, 6213 24VDC FSE DS-LC Box Assembly	112775	571.00
6112, 6121 12VDC FS Box Assembly	111751	384.00
6112, 6121 12VDC FSE Box Assembly	111752	384.00
6112, 6121 24VDC FS Box Assembly	111753	384.00
6112, 6121 24VDC FSE Box Assembly	111754	384.00
6112, 6121 12VDC FS DS Box Assembly	111755	559.00
6112, 6121 12VDC FSE DS Box Assembly	111756	559.00
6112, 6121 24VDC FS DS Box Assembly	111757	559.00
6112, 6121 24VDC FSE DS Box Assembly	111758	559.00
6112, 6121 12VDC FS DS-LC Box Assembly	112776	559.00
6112, 6121 12VDC FSE DS-LC Box Assembly	112777	559.00
6112, 6121 24VDC FS DS-LC Box Assembly	112778	559.00
6112, 6121 24VDC FSE DS-LC Box Assembly	112779	559.00
6114, 6214/15, 6222/24/24AL/25/26 12VDC FS Box Assembly	111719	433.00
6114, 6214/15, 6222/24/24AL/25/26 12VDC FSE Box Assembly	111720	433.00
6114, 6214/15, 6222/24/24AL/25/26 24VDC FS Box Assembly	111721	433.00
6114, 6214/15, 6222/24/24AL/25/26 24VDC FSE Box Assembly	111722	433.00
6114, 6214/15, 6224/24AL/26 12VDC FS DS Box Assembly	111723	612.00
6114, 6214/15, 6224/24AL/26 12VDC FSE DS Box Assembly	111724	612.00
6114, 6214/15, 6224/24AL/26 24VDC FS DS Box Assembly	111725	612.00
6114, 6214/15, 6224/24AL/26 24VDC FSE DS Box Assembly	111726	612.00
6114, 6214/15/24/24AL/26 12VDC FS DS-LC Box Assembly	112760	612.00
6114, 6214/15/24/24AL/26 12VDC FSE DS-LC Box Assembly	112761	612.00
6114, 6214/15/24/24AL/26 24VDC FS DS-LC Box Assembly	112762	612.00
6114, 6214/15/24/24AL/26 24VDC FSE DS-LC Box Assembly	112763	612.00
6210 12VDC FS Box Assembly	111244	640.00
6210 12VDC FSE Box Assembly	111246	392.00
6210 24VDC FS Box Assembly	111247	444.00
6210 24VDC FSE Box Assembly	111250	322.00
6210 12VDC FS DS Box Assembly	111251	815.00
6210 12VDC FSE DS Box Assembly	111264	570.00
6210 24VDC FS DS Box Assembly	111813	626.00
6210 24VDC FSE DS Box Assembly	111814	626.00
6210 12VDC FS DS-LC Box Assembly	112754	578.00
6210 12VDC FSE DS-LC Box Assembly	112755	578.00
6210 24VDC FS DS-LC Box Assembly	112784	578.00
6210 24VDC FSE DS-LC Box Assembly	112785	578.00
6211, 6211AL, 6212 12VDC FS Box Assembly	111711	370.00
6211, 6211AL, 6212 12VDC FSE Box Assembly	111712	370.00
6211, 6211AL, 6212 24VDC FS Box Assembly	111713	370.00
6211, 6211AL, 6212 24VDC FSE Box Assembly	111714	370.00

Prices subject to change without notice.

Description	Part. No.	List Price
6211, 6211AL, 6212 12VDC FS DS Box Assembly	111715	550.00
6211, 6211AL, 6212 12VDC FSE DS Box Assembly	111716	550.00
6211, 6211AL, 6212 24VDC FS DS Box Assembly	111717	550.00
6211, 6211AL, 6212 24VDC FSE DS Box Assembly	111718	550.00
6211WF, 6212WF 12VDC FS Box Assembly	111727	392.00
6211WF, 6212WF 12VDC FSE Box Assembly	111728	392.00
6211WF, 6212WF 24VDC FS Box Assembly	111729	392.00
6211WF, 6212WF 24VDC FSE Box Assembly	111730	392.00
6211WF, 6212WF 12VDC FS DS Box Assembly	111731	570.00
6211WF, 6212WF 12VDC FSE DS Box Assembly	111732	570.00
6211WF, 6212WF 24VDC FS DS Box Assembly	111733	570.00
6211WF, 6212WF 24VDC FSE DS Box Assembly	111734	570.00
6211WF, 6212WF 12VDC FS DS-LC Box Assembly	112764	570.00
6211WF, 6212WF 12VDC FSE DS-LC Box Assembly	112765	570.00
6211WF, 6212WF 24VDC FS DS-LC Box Assembly	112766	570.00
6211WF, 6212WF 24VDC FSE DS-LC Box Assembly	112767	570.00
6211, 6211AL, 6212 12VDC FS DS-LC Box Assembly	112756	550.00
6211, 6211AL, 6212 12VDC FSE DS-LC Box Assembly	112757	550.00
6211, 6211AL, 6212 24VDC FS DS-LC Box Assembly	112758	550.00
6211, 6211AL, 6212 24VDC FSE DS-LC Box Assembly	112759	550.00
6216 12VDC FS Box Assembly	111759	393.00
6216 12VDC FSE Box Assembly	111760	393.00
6216 24VDC FS Box Assembly	111761	393.00
6216 24VDC FSE Box Assembly	111762	393.00
6216 12VDC FS DS Box Assembly	111763	571.00
6216 12VDC FSE DS Box Assembly	111764	571.00
6216 24VDC FS DS Box Assembly	111765	571.00
6216 24VDC FSE DS Box Assembly	111766	571.00
6216 12VDC FS DS-LC Box Assembly	112780	571.00
6216 12VDC FSE DS-LC Box Assembly	112781	571.00
6216 24VDC FS DS-LC Box Assembly	112782	571.00
6216 24VDC FSE DS-LC Box Assembly	112783	571.00
6221, 6223 12VDC FS Box Assembly	111735	404.00
6221, 6223 12VDC FSE Box Assembly	111736	404.00
6221, 6223 24VDC FS Box Assembly	111737	404.00
6221, 6223 24VDC FSE Box Assembly	111738	404.00
6223 12VDC FS DS Box Assembly	111739	584.00
6223 12VDC FSE DS Box Assembly	111740	584.00
6223 24VDC FS DS Box Assembly	111741	584.00
6223 24VDC FSE DS Box Assembly	111742	584.00
6223 12VDC FS DS-LC Box Assembly	112768	584.00
6223 12VDC FSE DS-LC Box Assembly	112769	584.00
6223 24VDC FS DS-LC Box Assembly	112770	584.00
6223 24VDC FSE DS-LC Box Assembly	112771	584.00

Dual Monitor Switch Replacement Kits		
6100, 6200 DS Replacement Kit Type A – Standard Back Box	050011	221.00
6100, 6200 DS Replacement Kit Type B – Special Back Box	050015	221.00
6100, 6200 DS-LC Replacement Kit Type A – Standard Back Box	050016	221.00
6100, 6200 DS-LC Replacement Kit Type B – Special Back Box	050018	221.00

Prices subject to change without notice.

Description	Part. No.	622, 689, 695	US32D	List Price US10, US10B	US4	US3	US32
Faceplates							
4200 Faceplate, Round Corner	090110	–	19.00	–	–	–	–
4200 Faceplate, Square Corner	090114	–	19.00	–	–	–	–
5100 Faceplate Package - Standard 4 7/8"	050031	27.00	–	–	–	–	–
5100 Faceplate Package - Round Corner 4 7/8"	050032	27.00	–	–	–	–	–
5100 Faceplate Package – Long 7 15/16"	050033	27.00	–	–	–	–	–
6111 Faceplate	970271	–	404.00	445.00	404.00	552.00	464.00
6112, 6121 Faceplate	970303	–	368.00	475.00	368.00	560.00	327.00
6113 Faceplate	970280	–	400.00	415.00	400.00	543.00	415.00
6114 Faceplate	970300	–	333.00	412.00	375.00	464.00	347.00
6210 Faceplate	971198	–	277.00	389.00	277.00	442.00	375.00
6211AL Faceplate	970272	–	351.00	412.00	351.00	496.00	358.00
6211, 6211WF Faceplate	968716	–	291.00	331.00	291.00	416.00	295.00
6212, 6212WF Faceplate	969584	–	416.00	466.00	416.00	512.00	473.00
6213 Faceplate	970278	–	385.00	419.00	385.00	517.00	419.00
6214 Faceplate	971417	–	455.00	483.00	443.00	618.00	475.00
6215 Faceplate	971415	–	367.00	412.00	367.00	483.00	375.00
6216 Large Faceplate Insert	970407	–	108.00	125.00	108.00	150.00	131.00
6216 Small Faceplate Insert	970415	–	108.00	125.00	108.00	150.00	131.00
6216 Faceplate Less Inserts	971385	–	502.00	526.00	502.00	708.00	487.00
6221 Faceplate	970276	–	488.00	537.00	488.00	585.00	556.00
6222 Faceplate	970305	–	706.00	750.00	706.00	957.00	706.00
6223 Faceplate	970274	–	351.00	405.00	351.00	506.00	405.00
6224 Faceplate	970302	–	470.00	491.00	455.00	630.00	485.00
6224AL Faceplate	970310	–	483.00	535.00	483.00	670.00	491.00
6225 Faceplate	970306	–	639.00	677.00	639.00	770.00	706.00
6226 Faceplate	970301	–	327.00	371.00	327.00	479.00	336.00

Description	Part. No.	Non-Finished	US32D	List Price US10, US10B	US4	US3	US32
Screw & Mounting Packages							
4200 Hardware Kit (includes: mounting tab hardware, mounting screws, allen wrench and diode)	050805	15.00	–	–	–	–	–
5100 Mounting Package	PKGMTG.1004	–	13.00	–	–	–	–
5100 Mounting Package (Black)	PKGMTG.1005	13.00	–	–	–	–	–
5100 Series Screw Package	PKGSCR.1003	–	13.00	–	–	–	–
5100 Series Screw Package (Black)	PKGSCR.1004	13.00	–	–	–	–	–
6111, 6113 Screw Package	900870	–	11.00	11.00	11.00	11.00	11.00
6112, 6121 Screw Package	900881	–	12.00	13.00	13.00	13.00	13.00
6114 Screw Package	900882	–	12.00	13.00	13.00	13.00	13.00
6210 Strike Pocket Insert Mounting Package	900966	10.00	–	–	–	–	–
6210/11/13/14/16, 6222/24/25/26 Screw Package	900288	–	13.00	13.00	13.00	13.00	13.00
6211WF, 6212WF, 6221/23 Screw Package	900885	–	11.00	11.00	11.00	11.00	11.00
6212 Screw Package	900290	–	12.00	12.00	12.00	12.00	12.00
6216 Inserts and Screw Package	900345	263.00	–	–	–	–	–
Screw: 8-32 x 3/8" PPHMS	964070	10.00	–	–	–	–	–
Screw: 6-32 x 3/8" PPHMS Type 2A	964190	10.00	–	–	–	–	–

Prices subject to change without notice.

Description	Part. No.	List Price
Solenoid Parts		
5100 Solenoid Kit 12/24VDC	050034	75.00
6100, 6200 Series Solenoid Kit 12VDC (FS & FSE)	050237	115.00
6100, 6200 Series Solenoid Kit 16 VDC (FS & FSE)	050239	115.00
6100, 6200 Series Solenoid Kit 24VDC (FS & FSE)	050240	115.00
6100, 6200 Series Solenoid Kit 28VDC	050699	112.00
Solenoid Spring	968713	12.00
Solenoid Washer	964037	10.00
Spring Kits		
6111/13, 6213, 6221/23 Spring Kit	050942	35.00
6112/14/21, 6214/15/22/24/24AL/25/26 Spring Kit	050943	35.00
6210 Spring Kit	050940	41.00
6211/12 Spring Kit	050939	35.00
6216 Spring Kit	050941	41.00

Description	Part. No.	Non-Finished	List Price US4, US10, US10B, US32D	US3	US32
Miscellaneous Hardware					
#8 Ext. Tooth Lock Washer	964019	10.00	–	–	–
4200 Hardware Kit (includes: mounting tab hardware, mounting screws, allen wrench and diode)	050805	15.00	–	–	–
Entry Buzzer (FSE application only)	050242	41.00	–	–	–
12 VAC to 12 VDC Rectifier Kit	010057	42.00	–	–	–
24 VAC to 24 VDC Rectifier Kit	010058	42.00	–	–	–
6100, 6200 Series DS-LC Switch & Clip Assembly	113232	176.00	–	–	–
6111, 6113 Shim for blade stop applications (Specify finish)	010055	166.00	–	–	–
6113 Frame Insert Package	900347	10.00	–	–	–
6121 Housing Cover (Specify Finish)	970412		364.00	479.00	488.00
6210 Auxiliary Bolt Plate Package	900584	39.00	–	–	–
6212 Strike Pocket Insert/Mounting Tab	900292	29.00	–	–	–
6216 Inserts and Screw Package	900345	263.00	–	–	–
6300, 6400 Cable (Pigtail) Kit	050803	50.00	–	–	–
6300 Strike Shim Kit for blade stop applications	050804	63.00	–	–	–
6100, 6200 (9100) Filler Bracket Kit	050749	54.00	–	–	–
Connector	990132	11.00	–	–	–
DS Tripper Extension & Connector	900344	29.00	–	–	–
DS Tripper Extension	970384	11.00	–	–	–
FS Slider (Except 6211WF/6212WF/6221/6223)	970388	35.00	–	–	–
FSE Slider (Except 6211WF/6212WF/6221/6223)	970387	35.00	–	–	–
6400 Hardware Kit	050819	82.00	–	–	–

Prices subject to change without notice.

Description	Part. No.	List Price
Electric Latch Retraction		
EL Dogging Rod - 3'	050531	60.00
EL Dogging Rod - 4'	050532	60.00
EL Dogging Rod Retainer	050538	13.00
EL Solenoid & Plunger	050535	337.00
HD-EL Solenoid	050536	337.00
HD-EL Solenoid Plunger	050537	124.00
EL Plunger Bracket-94/95	972471	30.00
Pulse Width Module	050534	305.00
EL/QEL 6' Cable Assembly	110388	46.00
EL Receptacle Connector	050539	12.00
EL Female Terminal	050540	12.00
HD-EL Dog Screw	050541	15.00
HD-EL Dogging Spring	050543	15.00
HD-EL Solenoid Bracket	050542	27.00
QEL Cable Package (includes short QEL motor cable)	114320	11.00
QEL Extended Cable Assembly (includes QEL 6' cable and short QEL motor cable)	116549	58.00
QEL CON E7500 Adapter Harness	106187	13.00
Connector QEL Modified Harness	106198	11.00
EL Baseplate Conversion Kit 3'	050070	1,074.00
EL Baseplate Conversion Kit 4'	050078	1,074.00
EL Baseplate Conversion Kit 3' with Allegion Connect - CON	050853	1,074.00
EL Baseplate Conversion Kit 4' with Allegion Connect - CON	050854	1,074.00
HD-EL Baseplate Conversion Kit 3' (Hex Dogging included - Panic Only)	050384	1,074.00
HD-EL Baseplate Conversion Kit 4' (Hex Dogging included - Panic Only)	050385	1,074.00
HD-EL Baseplate Conversion Kit 3' (Hex Dogging included - Panic Only) with Allegion Connect - CON	050855	1,074.00
HD-EL Baseplate Conversion Kit 4' (Hex Dogging included - Panic Only) with Allegion Connect - CON	050856	1,074.00
QEL Modular Conversion Kit	114317	914.00
QEL Modular Conversion Kit with Allegion Connect - CON	040061	914.00
HD-QEL Modular Conversion Kit (Hex Dogging included - Panic Only)	958002	914.00
HD-QEL Modular Conversion Kit (Hex Dogging included - Panic Only) with Allegion Connect - CON	040062	914.00
QEL Baseplate Conversion Kit 3'	958003	960.00
QEL Baseplate Conversion Kit 4'	040065	960.00
QEL Baseplate Conversion Kit 3' with Allegion Connect - CON	040063	960.00
QEL Baseplate Conversion Kit 4' with Allegion Connect - CON	040066	960.00
HD-QEL Baseplate Conversion Kit 3' (Hex Dogging included - Panic Only)	958004	960.00
HD-QEL Baseplate Conversion Kit 4' (Hex Dogging included - Panic Only)	040067	960.00
HD-QEL Baseplate Conversion Kit 3' (Hex Dogging included - Panic Only) with Allegion Connect - CON	040064	960.00
HD-QEL Baseplate Conversion Kit 4' (Hex Dogging included - Panic Only) with Allegion Connect - CON	040068	960.00
QEL 94/95 Inpact Modular Conversion Kit	958005	914.00
Pneumatic Latch Retraction		
Pneumatic Power Transfer	012014	619.00
Pneumatic Tubing - 25'	051828	25.00
Pneumatic Tubing - 50'	051823	33.00
Pneumatic Tubing - 100'	051824	56.00
Pneumatic Tubing - 200'	051825	106.00
Pneumatic Solenoid Kit	051826	849.00
Pneumatic Adapter Kit - LCN 1/4" Tube	051827	38.00

Prices subject to change without notice.

Description	Part. No.	List Price
Chexit		
Chexit PCB Kit - 15 second release - Ordered after 8/17/2015	040086	1,026.00
Chexit PCB Kit - 30 second release - Ordered after 8/17/2015	040088	1,160.00
Chexit PCB KIT - 0 Second Delay release - Ordered after 8/17/2015	040089	1,160.00
Chexit PCB Kit - 15 Second Boca release - Ordered after 8/17/2015	040091	1,160.00
Chexit PCB Kit - Infinite Release	040087	1,160.00
DE5300/RCM PCB Kit - 15 Second release	090943	976.00
DE5300/RCM Key Switch Assy	040169	123.00
RCM/DE5300 Cable Kit	040188	113.00
CX99-RCM Kit Less Module - Ordered after 8/17/2015	040198	259.00
CX98-RCM Kit Less Module - Ordered after 8/17/2015	040199	259.00
CX-RCM Cable Assy - Ordered after 8/17/2015	040092	69.00
CX Solenoid & Plunger	050533	302.00
Chexit Wiring Assembly - Ordered after 8/17/2015	040191	197.00
Sign 15 Second - Chexit/DE5300	113781	58.00
Sign 30 Second - Chexit/DE5300	113782	62.00
CX Motor Cable Kit - Ordered after 8/17/2015	040192	11.00
CX Trim Device Cable Kit - Ordered after 8/17/2015	040193	23.00
CX RX Switch Assembly Kit - Ordered after 8/17/2015	116717	236.00
CX Key Switch Assy 3' Device - Ordered after 8/17/2015	040170	118.00
CX Key Switch Assy 4' Device - Ordered after 8/17/2015	040189	118.00
CX Wire Guard - Ordered after 8/17/2015	970012	44.00

Description	Part. No.	List Price Non-Finished
Switch		
LX-RX 94/95 Switch Wire Assembly (R/Y/B)	110360	113.00
SS Cable	050544	136.00
SS Housing	050545	454.00
RX Switch Assy	050251	249.00
RX-LC Switch Assy	050281	288.00
RX-2 Switch Assy	050270	309.00
RX-Aux Switch Assy	050271	258.00
WP-RX-AUX Switch Assy	051881	358.00
LX Switch Assy 3'	050254	249.00
LX Switch Assy 4'	050255	249.00
LX-LC Switch Assy 3'	050283	288.00
LX-LC Switch Assy 4'	050285	288.00
LX-RX Switch Assy 3'	050256	376.00
LX-RX Switch Assy 4'	050257	376.00
LX-RX-LC Switch Assy 3'	050289	450.00
LX-RX-LC Switch Assy 4'	050291	450.00
EL-LX Switch Assy	050247	249.00
EL-LX-LC Switch Assy	050287	288.00
EL-LX-RX Switch Assy	050259	376.00
EL-LX-RX-LC Switch Assy	050293	450.00
94/95 Inpact LX Switch Kit	050226	249.00

Consult technical support for details.

Prices subject to change without notice.

Description	Part. No.	List Price Non-Finished	SP28, SP313
E360 Controls			
E360 FSE SOLENOID KIT	050743	630.00	-
E360 FS SOLENOID KIT	050744	630.00	-
E996 Trims			
E996 Mort Conv to E Kit	050673	714.00	-
E996 R/VC Conv to E Kit	050672	687.00	-
E996 Locking Mech Kit	050671	430.00	-
E996 Wire Harness	CABLE.10038	44.00	-
CON E996 Adapter Harness	106183	32.00	-
Alarm Kit			
ALK PCB Assembly	101030	473.00	–
ALK Cylinder Collar - 22	967704	–	23.00
ALK Cylinder Collar - 33A/35A/98/99	050525	–	45.00
ALK Sign	SIGN-1	24.00	–
ALK Arming Label	969349	12.00	–
ALK Disarming Label	969350	12.00	–
ALK Retainer Nut	969354	24.00	–
ALK Cylinder Spacer	970594	15.00	–
ALK Switch Actuator	971556	21.00	–
ALK Cylinder Bracket	971557	13.00	–
ALK Battery	990637	23.00	–
CON ALK/EAK Adapter Harness	106182	12.00	–
Cover Plate Anti-Rattle Spring Pkg/10	090036	12.00	–
Allegion Connect - Wire Harnesses		**Net Price Non-Finished**	
CON-6: Wire Harness, Molex Conn-Both Ends	106190	10.50	-
CON-12: Wire Harness, Molex Conn-Both Ends	106191	14.00	-
CON-26: Wire Harness, Molex Conn-Both Ends	106192	15.80	-
CON-32: Wire Harness, Molex Conn-Both Ends	106193	16.90	-
CON-38: Wire Harness, Molex Conn-Both Ends	106194	18.50	-
CON-44: Wire Harness, Molex Conn-Both Ends	106195	18.00	-
CON-50: Wire Harness, Molex Conn-Both Ends	106196	18.50	-
CON-192: Wire Harness, Molex Conn-Both Ends	106197	4420	-
CON-6P: Wire Harness, Molex Conn, Crimped Pin	106201	13.40	-
CON-12P: Wire Harness, Molex Conn, Crimped Pin	106202	16.90	-
CON-26P: Wire Harness, Molex Conn, Crimped Pin	106203	18.50	-
CON-32P: Wire Harness, Molex Conn, Crimped Pin	106204	19.80	-
CON-38P: Wire Harness, Molex Conn, Crimped Pin	106205	20.30	-
CON-44P: Wire Harness, Molex Conn, Crimped Pin	106206	20.90	-
CON-50P: Wire Harness, Molex Conn, Crimped Pin	106207	21.50	-
CON-192P: Wire Harness, Molex Conn, Crimped Pin	106208	46.50	-
CON-6W: Wire Extension to power supply	106210	13.40	-
CON-Kit, Connector Service Kit	050823	111.00	-
Miscellaneous		**List Price Non-Finished**	
Switch Cover Assy - 4000 Monitor Strikes	105100	133.00	–
EPT Filler Kit	900978	–	28.00
900-BAT Power Supply Batteries	44487155	122.00	–
PS914 Enclosure Door Label	44489870	5.00	–

Prices subject to change without notice.

Guard-X 26 Series

Description	Part. No.	List Price Non-Finished	BLACK, US19	SP28, SP313
2670 Lockside Cover Kit SP28	COVER.109	–	–	187.00
2670 Lockside Cover Kit US19	COVER.122	–	187.00	–
2670 Lockside Cover Kit SP313	COVER.121	–	–	187.00
2670 Hingeside Cover Kit - Silver	COVER.114	–	–	48.00
2670 Hingeside Cover Kit - Black	COVER.115	–	48.00	–
2670 Hingeside Cover Kit - Brown	COVER.116	–	–	48.00
2670 Endcap Kit	ECAP.105	–	28.00	–
2670 PCB Kit Field - English	PCB.10018	253.00	–	–
2670 PCB Kit Field - Spanish	PCB.10019	253.00	–	–
2670 PCB Kit Field - French	PCB.10020	253.00	–	–
Alarm Sign - French	SIGN.1001	65.00	–	–
Alarm Sign - Spanish	SIGN.1002	65.00	–	–
Alarm Sign - English	SIGN.1003	65.00	–	–
Cylinder Retaining Bracket Kit	BRKT.121	37.00	–	–
Lightpipe Kit	PIPE.101	29.00	–	–
2670 Cylinder Tailpiece Extension	050379	10.00	–	–
2670 Device Mounting Package US28	PKGMTG.1002	–	–	32.00
2670 Device Mounting Package Black	PKGMTG.1003	–	32.00	–
2670 Cover Screw Kit SP28	PKGSCR.1001	10.00	–	–

237 Two Point Latch

Description	Part. No.	List Price Non-Finished	US32D	US10B	US10	US4	US32
237 Top Rod Assembly	112845	–	470.00	478.00	432.00	542.00	522.00
237 Bottom Rod Assembly	112844	141.00	–	–	–	–	–
237 Mounting Plate Package	112835	–	10.00	14.00	14.00	38.00	10.00

Prices subject to change without notice.

Service Replacement • Parts

Description	Part. No.	List Price Non-Finished	US10B, US26D	US10	US4	US3, US26
7500-880TP Retrofit Kit	050122	–	69.00	69.00	69.00	69.00
End Cap Mtg. Brkt. Screw (Pkg of 30)	090060	53.00	–	–	–	–
Old Style Hex Dogging Retrofit Kit	050709	69.00	–	–	–	–
Old Style 227 Dog Key 5/32" (Pkg of 10)	090084	71.00	–	–	–	–
34/58 Thumb Latch Lift Spring (Pkg of 5)	091030	69.00	–	–	–	–
34/58 Dog Lock Spring (Pkg of 10)	091031	124.00	–	–	–	–
34/58 Auxiliary Bolt Spring (Pkg of 10)	091032	205.00	–	–	–	–
66 Dog Screw (Pkg of 10)	091061	145.00	–	–	–	–
222 Dog Key 7/32" (Pkg of 10)	091080	97.00	–	–	–	–
Wedgetite Screw - Fine Thread (Pkg of 10)	091082	65.00	–	–	–	–
370 Series 6-32 x 1/4 UFPHMS	963150	12.00	–	–	–	–
370 Series 1/4-20 x 1 Set Screw	963584	12.00	–	–	–	–
33/3527 Bottom Rod Roll Pin	963585	12.00	–	–	–	–
SS333NL Backplate Screw 8-32 x 3/8" PPHMS	963712	12.00	–	–	–	–
10-24 x 1/2" UFPHMS Epoxy Lock	963873	12.00	–	–	–	–
370 Series 6-32 x 7/16" PPHMS	963902	12.00	–	–	–	–
333/337 1/4-20 x 2 Socket Set Screw	963905	12.00	–	–	–	–
370 Series #10 Flat Washer	964375	12.00	–	–	–	–
Cover Bearing Insert - Old Style	969889	12.00	–	–	–	–
334/333/337/3308 Sex Bolt Extension	971614	13.00	–	–	–	–
992L-DT OR NL Conversion Kit	050154	123.00	–	–	–	–
992L Replacement Cam Kit w/Slider	050155	123.00	–	–	–	–
992L Replacement Cam Kit Less Slider	050157	50.00	–	–	–	–
Note Original ship date on Parts listed below						
EL Solenoid Replacement Kit	050218	685.00	–	–	–	–
For EL Devices shipped before January 1987						
Orbit Knob Assy - 606K/880K Trim	108490	–	209.00	209.00	209.00	209.00
Orbit Knob Assy - 606K-DT/880K-DT Trim	108493	–	209.00	209.00	209.00	209.00
880 Knob Booster Spring Assembly	033024	50.00	–	–	–	–
For Trims shipped before October 1989						
#22 Hitch Pin - Hex/CD Dogging old style	963909	12.00	–	–	–	–
Dogging Shaft - Hex Dogging Old Style	968112	15.00	–	–	–	–
CD Actuator Arm - Cylinder Dogg Old Style	968116	13.00	–	–	–	–
For Devices shipped before July 1997						
7500-373L Retrofit Kit	050124	21.00	–	–	–	–
For Devices shipped before August 1997						
22/98/9927/-F Btm Latch/Brkt Repl. Kit	050090	–	145.00	145.00	145.00	145.00
22/98/9927/-F Top Latch/Brkt Repl. Kit	050091	–	145.00	145.00	145.00	145.00
22/98/9927/27-F Latch Mtg. Screws 1 3/4" Dr	900564	12.00	–	–	–	–
22/98/9927/27-F Latch Mtg. Screws 2 1/4" Dr	900569	12.00	–	–	–	–
For Devices shipped before October 1998						
Mechanism End Cap Screw Package	900901	–	12.00	15.00	12.00	12.00
RX 330/350 Old Style End Cap Mtg. Bracket for Lock Stile	050397	12.00	–	–	–	–
For Devices shipped before January 2002						
47 Btm Latch Spirol Pin (Pkg of 10)	090062	15.00	–	–	–	–
For Devices shipped before April 2003						
376WDC Rod member Kit 1 3/4"	109113	133.00	–	–	–	–
376WDC Rod Member Kit 2" Door	900583	–	142.00	142.00	142.00	142.00
376WDC Rod Member Kit 2 1/4" Door	109118	186.00	–	–	–	–
For Controls shipped before January 2008						

Prices subject to change without notice.

OLD P/N	NEW P/N	OLD P/N	NEW P/N	OLD P/N	NEW P/N	OLD P/N	NEW P/N
213	050342	101801	050456	106769	050316	111942	050193
011214	050338	101907	050418	106769	050318	111948	113100
011223	050343	102274	050139	106769	050324	111949	050506
011224	050339	102277	050137	106769	050326	111950	050504
011233	050340	102551	050036	106780	050493	112342	050575
011234	050336	102676	050462	107021	050750	112461	111869
011243	050341	102681	050463	107023	050592	112727	050491
011244	050337	102685	050432	107682	050451	112906	050494
011253	050350	102691	050430	107798	050456	112907	050495
011254	050346	102694	050431	108327	050402	112910	050583
011263	050351	102701	050446	108360	050513	112915	050535
011264	050347	102703	050202	108361	050515	112924	050401
011273	050348	102930	114141	108994	PBKIT.1001	112925	050400
011274	050344	103234	050455	108994	PBKIT.1002	113004	050732
011283	050349	104154	050411	108995	PBKIT.1003	113005	050733
011284	050345	104164	050428	108995	PBKIT.1004	113006	050734
050361	050360	104165	050429	109041	050537	113007	050736
061420	050005	104367	050210	109160	050128	113078	050737
062370	050459	104759	050053	109759	050492	113079	050738
090058	090065	105020	050457	109760	050754	113080	050739
100511	050200	105163	050110	109811	900620	113081	050741
100693	050209	105641	050096	109826	050366	113125	050548
100729	050439	105666	050458	109861	050357	113126	050549
100744	050438	106118	050440	110007	050531	113129	050550
100751	050497	106122	050441	110008	050532	113130	050551
100999	050442	106144	050372	110051	050401	113133	050552
101000	050443	106145	050374	110052	050400	113134	050553
101011	050201	106147	050373	110058	050402	114169	050516
101134	050112	106174	050437	110163	050756	945501	090001
101137	050136	106180	050452	110165	050757	950522	090012
101149	050368	106708	050295	110375	050574	951081	050476
101190	050367	106708	050296	110416	050582	951780	090013
101444	050444	106708	050297	110472	050544	951960	050501
101445	050445	106708	050298	110525	110769	951970	050502
101590	050498	106708	050303	110573	050512	952400	050448
101593	050424	106708	050304	110574	050514	952530	050447
101594	050425	106708	050305	110658	050545	956011	PKGSRV.1018
101598	050426	106708	050306	110740	050536	956520	090020
101599	050427	106725	050299	110741	050534	957750	050278
101648	050482	106725	050300	110767	971012	958643	090014
101662	050409	106725	050301	110783	971012	959098	113853
101665	050410	106725	050302	110845	113098	959122	972466
101686	050413	106725	050307	111645	050752	959707	971593
101689	050414	106725	050308	111651	050758	959850	050352
101695	050420	106725	050309	111657	050760	959853	050353
101695	050422	106725	050310	111669	050762	959957	050355
101698	050421	106847	050412	111675	050764	959958	050332
101698	050423	106763	050311	111795	101030	959969	050364
101701	050417	106763	050313	111931	050197	959986	050333
101704	050419	106763	050319	111932	050196	959990	090023
101707	050415	106763	050321	111933	050189	959991	050356
101710	050416	106765	050312	111934	050191	959995	050334
101713	050435	106765	050314	111935	050184	960049	090030
101716	050436	106765	050320	111936	050183	960303	970488
101750	050460	106765	050322	111937	050198	960345	050503
101751	050461	106767	050315	111938	050199	960548	050464
101752	050471	106767	050317	111940	050195	101777	050455
101753	050472	106767	050323	111941	050192	960578	050327

Prices subject to change without notice.

Part Number Cross Reference

OLD P/N	NEW P/N
960581	050453
960652	050277
960675	050499
960756	050211
960856	050260
961152	050369
961206	050465
961218	050478
961628	050453
961814	050272
961988	900614
963011	900502
963019	090035
963094	090024
963096	090025
963098	900610
963099	090002
963100	050613
963103	090015
963128	090059
963130	090032
963155	090061
963193	090016
963512	090100
963531	050614
963585	090010
963712	900613
963750	090018
963757	090103
963760	090098
963789	090027
963935	090054
964041	090077
964066	090107
964085	090063
964154	090102
964358	900541
964360	090034
964363	050509
964390	090037
964395	
964557	090073
965278	050360
965279	050359
965294	090033
965300	050362
965301	050363
965322	090009
965325	050273
965326	050274
965335	090017
965506	050505
965676	090021
965916	090092
965917	090091
965996	050331
106767	050325
966165	050370

OLD P/N	NEW P/N
966384	050607
966450	971614
966897	050541
967032	050490
967116	90069
967151	051705
967154	051707
967224	090011
967448	090064
967481	090097
967482	050607
967484	050599
967489	050606
967490	050609
967492	050600
967493	050602
967495	090096
967496	090090
967502	050354
967616	050328
967622	050454
967623	050454
967644	050598
967648	050612
967673	090095
967736	050004
967738	050004
967826	090065
967968	090062
968503	050508
968638	050486
968639	050487
968762	968793
968833	050449
968834	090056
968862	050597
968863	050596
968868	050619
968957	090057
968964	090058
968969	090067
969199	050361
969219	050603
969235	050542
969244	050543
969252	090071
969295	971010
969297	090075
969300	661481
969400	969889
969369	050477
969400	969889
969467	090079
969855	050566
969864	050564
969506	050566
111939	050194
969520	050529

OLD P/N	NEW P/N
969582	090076
969816	050601
969836	050555
969837	050555
969838	050556
969839	050556
969855	050566
969864	050564
969925	972466
969987	050530
969994	050474
969995	050475
970079	90048
970086	050555
970087	050555
970088	050556
970089	050556
970126	970387
970148	970388
970173	968694
970180	971556
970181	971557
970184	050621
970193	050488
970194	050489
970206	050554
970207	050554
970208	050554
970368	050547
970441	090074
970527	050557
970528	050558
970547	971822
970549	900588
970567	050616
970597	050557
970598	050557
970599	050557
970601	050558
970602	050558
970603	050558
970719	090036
970771	090068
970815	050576
970817	050358
970863	972549
970873	970872
970909	050500
970911	050559
970912	050559
970914	050560
970915	050560
971050	090066
971052	050562
971053	050562
971055	050563
960577	050279
971056	050563

OLD P/N	NEW P/N
971267	050525
971308	090038
971326	050538
971348	090088
971351	090039
971367	090047
971424	050275
971425	050276
971483	050566
971492	090040
971495	090043
971496	090045
971507	090031
971507	050585
971537	090072
971560	050406
971561	050407
971562	050570
971564	050569
971567	050546
971568	050481
971583	050611
971583	PKGSRV.1010
971584	090070
971625	050554
971627	050559
971628	050560
971629	050562
971630	050562
971631	050563
971632	050563
971635	050397
971638	050565
971781	050559
971782	050560
971796	050507
971837	090046
971838	090044
971910	050524
971974	050526
971993	090049
971493	090041
971494	090042
990592	050540
990598	050539
990598	050539

Prices subject to change without notice.

A library of common wiring diagrams are available at no-charge for use in single and double door applications utilizing various configurations of Allegion door hardware products. These diagrams and much more can be accessed through our Knowledge Center tool at http://kc.allegion.com/, simply click on the link Common wiring diagrams.

Custom Wiring Diagrams

When common wiring diagrams do not meet the needs of the job requirements, Allegion offers a service to purchase custom wiring diagrams. All custom wiring diagrams include a point-to-point drawing, a riser diagram, and a detailed theory of operation. Custom wiring diagrams fall into two categories; Standard and Complex.

- Standard drawings: All Allegion products with a single opening and a basic theory of operation. These drawings will be quoted a NET $250 for each drawing
- Complex drawings: Generic contacts, 3rd party components, complex relay logic, timer circuit logic, any other additional advanced logic. Drawings that fall under this type will receive a NET quote depending on the time required to complete the drawings at an hourly rate of $200/hour with a $250 minimum NET

How to Request a Quote for a Custom Wiring Diagram

- Custom wiring diagrams can only be ordered by and shipped to current Allegion Channel Partners
- Wiring Diagram Request Forms can be obtained by:
  - Sending an email request to Wiring.Diagram.Request@allegion.com
  - Using the online Distributor Portal under; My Support / Orders & Invoicing
  - Using the form located on page 173
- Once completed, email the completed request form to Wiring.Diagram.Request@allegion.com for processing
  - Be sure and include the following information to prevent delays to the request:
    - All supporting documentation for non-Allegion products
    - Hardware list with complete part numbers
    - Detailed Theory of operation for all openings
- Upon receipt the custom wiring coordinator will review and clarify the request as needed
- Once all clarifications are resolved a QUOTE#, NET pricing, and lead time will be assigned and communicated to the requestor within 1 business day
- QUOTE# is valid for 90 days
- A purchase order with the QUOTE# must be received for the wiring diagrams to be produced
  - Send the completed PO to Wiring.Diagram.Request@allegion.com
- Lead time is generally 2-3 weeks from time PO is received, more complex requests will have longer lead times
- Changes to the original request after a quote approval may incur additional charges and affect lead time
- Completed custom wiring diagrams will be emailed to the requestor

Prices subject to change without notice.

Wiring Diagram Request Form

ALLEGION™

Must be a Schlage Electronics, LCN, or Von Duprin Dealer

==========

Date ___/___/_____ Project Name _____

Dealer/Distributor _____

Account #_____ Dealer Contact Name _____ Phone _____-_____-_____

==========

Provide a Primary Technical Contact _____ Phone _____-_____-_____

==========

Provide/Attach the Following

- All supporting documentation for all non-Allegion products.
- Included hardware list with complete part numbers.
- Detailed Theory of Operation for all openings.

Additional information that helps expedite the project:

Door Number; Door Size; Door Material;

Fire Rated Opening; Single/Pair; Double Egress; Interior/Exterior;

Interlocked Opening; Basic Floor Plan/Traffic Flow

==========

E-mail completed form and supporting documentation to

Wiring.Diagram.Request@allegion.com

Phone: 877-671-7011

Warranty

Warranty: The Company warrants that the product manufactured by it and delivered hereunder will be free of defects in material and workmanship for a period as follows: (1) exit devices and trim for 36 months from the date of placing the product in operation or for 42 months from the date of shipment; (2) electric strikes for 5 years on mechanical components and 1 year on electrical components including the solenoid and wiring from the date of installation; and (3) electrified exit devices and other electrified products for 12 months from the date of placing the product in operation or 18 months from the date of shipment, whichever shall first occur. The Purchaser shall be obligated to promptly report any failure to conform to this limited warranty, in writing, to the Company within said limited warranty period, whereupon the Company shall, at its option, correct such nonconformity, by suitable repair to such product or, furnish a replacement part F.O.B. point of shipment; provided the Purchaser has stored, installed,maintained and operated such product in accordance with good industry practices and has complied with specific recommendations of the Company. Accessories or product furnished by the Company, but manufactured by others, shall carry whatever warranty the manufacturers have conveyed to the Company and which can be passed on to the Purchaser. The Company shall not be liable for any repairs, replacements, or adjustments to the product or any costs of labor performed by the Purchaser or others without the Company's prior written approval.

The effects of corrosion, erosion and normal wear and tear are specifically excluded from this limited warranty. Performance warranties are limited to those specifically stated within the Company's proposal. Unless responsibility for meeting such performance warranties are limited to specified shop or field tests, the Company's obligation shall be to correct in the manner and for the period of time provided above.

The Company makes no other warranty or representation of any kind whatsoever, expressed or implied, except that of title, and all implied warranties of merchantability and fitness for a particular purpose, are hereby disclaimed. No agent, representative, dealer, or employee of Company has the authority to increase or alter the obligations of this limited warranty.

Correction by the Company of nonconformities whether patent or latent, in the manner and for the period of time provided above, shall constitute fulfillment of all liabilities of the Company for such nonconformities, whether based on contract, warranty, negligence, indemnity, strict liability or otherwise with respect to or arising out of such Equipment.

The Purchaser shall not operate product which is considered to be defective, without first notifying the Company in writing of its intention to do so. Any such use of product will be at the Purchaser's sole risk and liability and will not be covered by this limited warranty.

Customer Care: 877-671-7011

RMA requests (Return Material Authorization) are to be directed to Von Duprin, 2720 Tobey Drive, Indianapolis, IN 46219. Attn: Customer Service.

About Allegion

Allegion (NYSE: ALLE) creates peace of mind by pioneering safety and security. As a $2 billion provider of security solutions for homes and businesses, Allegion employs more than 7,800 people and sells products in more than 120 countries across the world. Allegion comprises 23 global brands, including strategic brands CISA®, Interflex®, LCN®, Schlage® and Von Duprin®.

For more, visit **www.allegion.com**

KRYPTONITE ■ LCN ■ SCHLAGE ■ STEELCRAFT ■ VON DUPRIN

© 2019 Allegion
010058, Rev. 05/19
allegion.com/us

ALLEGION™